IDEC

S3 CONNECT

Programmable Logic Controllers

FC6A

MicroSmart

Manage your production site with a powerful and simple remote monitoring solution

IDEC CORPORATION

Features

FC6A Plus supports MQTT protocols

- MQTT protocol suitable for a wide variety of IoT applications.
- A gateway is not required. Connects directly to a PLC.
- Supports ID and password authentication as well as certificate based authentication.

FC6A Plus connects to EtherNet/IP™

- Connects to EtherNet/IP™ without exclusive communication modules.
- Communicates with both scanner and adapter devices.

* EtherNet/IP is a registered trademark of ODVA.

Remote control with Web Server function

Use pre-installed, program-less simple pages or design your own custom pages using Web Page Editor.

Wide range of applications

Web server, Send E-mail, FTP server/client, and user communication functions are achieved with the Ethernet communication, enabling to manage the control and information systems at the same time.

New application possibilities

CAN J1939 communication and BACnet/IP protocol available, expanding the possibility of PLC applications.

Bluetooth (Wireless)

PLC can be controlled or monitored from smartphones and tablets using a Bluetooth communication cartridge.

A maximum of 10 racks and 63 expansion modules can be connected.

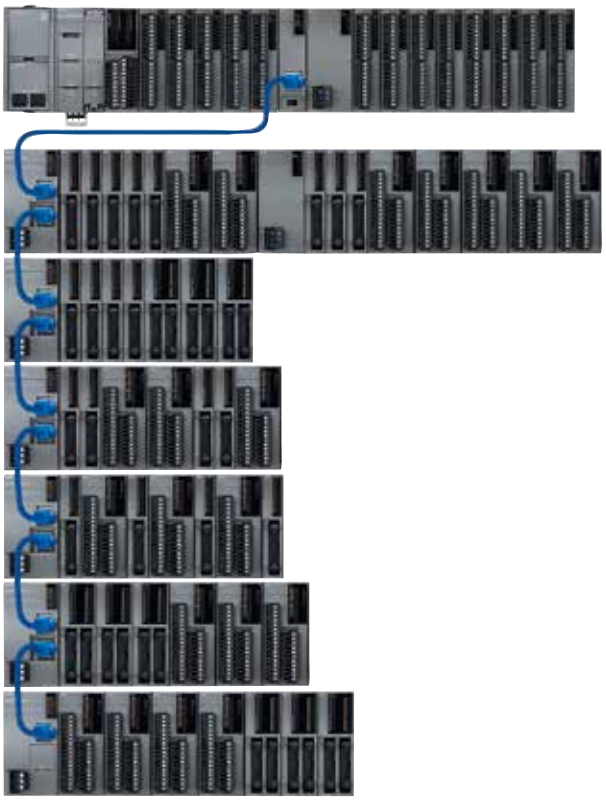

ANSI/ISA 12.12.01 approved for hazardous locations.
Certified for marine use by Lloyd's Register (LR), American Bureau of Shipping (ABS), Det Norske Veritas (DNV), and NIPPON KAIJI KYOKAI (NK).
*) Some models are not designed for these certifications. Contact IDEC for more details.

Push-in connections are available for all FC6A models.

One step wiring, easy & quick connection. Safe and efficient Push-in connections.

Time saving and efficient

Save up to 55% in wiring time

Wiring time greatly reduced compared with general screw terminals.

*Compared to general screw terminals (Based on IDEC research).

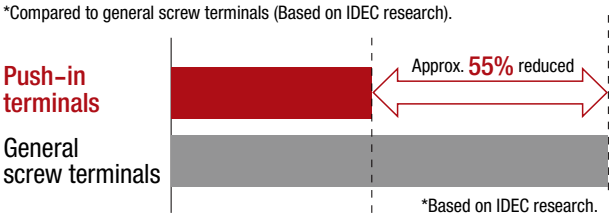

Reliable and easy

Reduce maintenance work

Push-in terminals eliminate the need for torque maintenance such as tightening of screws because screws are not used.

Vibration-resistant

Safe and reliable Push-in connection achieves high contact reliablity and vibration resistance regardless of the wire size or shape.

Simple wiring

Work can be performed without using tools and regardless of operators' skill level.

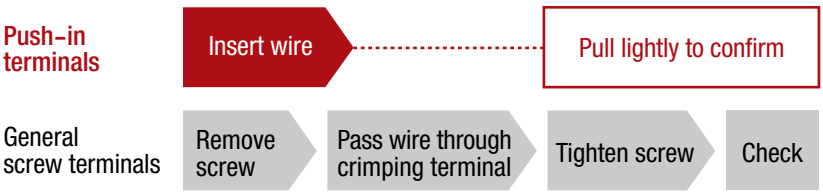

*When ferrule is used.

Lineup
Plus
All-in-One
Modules
Cartridges
Dimensions
Mounting Hole Layout
Instructions

Lineup

FC6A Plus CPU Modules

Package Quantity: 1

High-speed Counter Pulse Output	Power	Input	Output	Interface	I/O Points	Terminal		Part No.
• High-speed counter Maximum input frequency: 100 kHz • Pulse output (*5) Maximum output frequency: 100 kHz	24V DC	24V DC (Sink/Source)	Relay Output 2A (240VAC-2A, 30V DC-2A)	Port 1 (USB) Port 2 (Ethernet) Port 3 (Ethernet)	16 points (8/8)	Removable terminal (I/O part: 3.81mm pitch, Power part: 5.08mm pitch)	(*1)	FC6A-D16R1CEE
							(*2)	FC6A-D16R4CEE
			Transistor Source Output 0.5A				(*1)	FC6A-D16P1CEE
							(*2)	FC6A-D16P4CEE
			Transistor Sink Output 0.5A				(*1)	FC6A-D16K1CEE
							(*2)	FC6A-D16K4CEE
			Transistor Source Output 0.1A		32 points (16/16)	20-pin MIL connector (Input terminals, Output terminals)	(*3)	FC6A-D32P3CEE
							(*4)	FC6A-D32P4CEE
			Transistor Sink Output 0.1A				(*3)	FC6A-D32K3CEE
							(*4)	FC6A-D32K4CEE

*1) Screw fastened type (input terminals, output terminals, power terminals) *2) Push-in type (input terminals, output terminals, power terminals)
*3) Screw fastened type (only power terminals, power terminals: 5.08mm pitch) *4) Push-in type (only power terminals, power terminals: 5.08mm pitch)
*5) Only transistor output type

FC6A All-in-One CPU Modules

Package Quantity: 1

High-speed Counter Pulse Output	Power	Input	Output	Interface	I/O Points		Part No.
• High-speed counter Maximum input frequency: 100 kHz • Pulse output (*3) Maximum output frequency: 100 kHz	100V to 240V AC (50/60Hz)	24V DC (Sink/Source)	Relay Output 2A, 240V AC-2A, 30V DC-2A	Port 1 (USB) Port 2 (RS232C/ RS485) Port 3 (Ethernet)	16 points (9/7)	(*1)	FC6A-C16R1AE
						(*2)	FC6A-C16R4AE
					24 points (14/10)	(*1)	FC6A-C24R1AE
						(*2)	FC6A-C24R4AE
					40 points (24/16)	(*1)	FC6A-C40R1AE
						(*2)	FC6A-C40R4AE
	24V DC				16 points (9/7)	(*1)	FC6A-C16R1CE
						(*2)	FC6A-C16R4CE
			Transistor Source Output 0.5A		16 points (9/7)	(*1)	FC6A-C16P1CE
						(*2)	FC6A-C16P4CE
			Transistor Sink Output 0.5A		16 points (9/7)	(*1)	FC6A-C16K1CE
						(*2)	FC6A-C16K4CE
			Relay Output 2A, 240V AC-2A, 30V DC-2A		24 points (14/10)	(*1)	FC6A-C24R1CE
						(*2)	FC6A-C24R4CE
			Transistor Source Output 0.5A		24 points (14/10)	(*1)	FC6A-C24P1CE
						(*2)	FC6A-C24P4CE
			Transistor Sink Output 0.5A		24 points (14/10)	(*1)	FC6A-C24K1CE
						(*2)	FC6A-C24K4CE
			Relay Output 2A, 240V AC-2A, 30V DC-2A		40 points (24/16)	(*1)	FC6A-C40R1CE
						(*2)	FC6A-C40R4CE
			Transistor Source Output 0.5A		40 points (24/16)	(*1)	FC6A-C40P1CE
						(*2)	FC6A-C40P4CE
			Transistor Sink Output 0.5A		40 points (24/16)	(*1)	FC6A-C40K1CE
						(*2)	FC6A-C40K4CE
	12V DC	12V DC (Sink/Source)	Relay Output 2A, 240V AC-2A, 30V DC-2A		16 points (9/7)	(*1)	FC6A-C16R1DE
						(*2)	FC6A-C16R4DE
					40 points (24/16)	(*1)	FC6A-C40R1DE
						(*2)	FC6A-C40R4DE
			Transistor Source Output 0.5A		16 points (9/7)	(*1)	FC6A-C16P1DE
						(*2)	FC6A-C16P4DE
					40 points (24/16)	(*1)	FC6A-C40P1DE
						(*2)	FC6A-C40P4DE
			Transistor Sink Output 0.5A		16 points (9/7)	(*1)	FC6A-C16K1DE
						(*2)	FC6A-C16K4DE
					40 points (24/16)	(*1)	FC6A-C40K1DE
						(*2)	FC6A-C40K4DE

*1) Screw fastened type *2) Push-in type *3) Only transistor output type

CAN J1939 All-in-One FC6A CPU Modules

Package Quantity: 1

High-speed Counter Pulse Output	Power	Input	Output	Interface	I/O Points		Part No.
• High-speed counter Maximum input frequency: 100 kHz • Pulse output (*3) Maximum output frequency: 100 kHz	100V to 240V AC(50/60Hz)	24V DC (Sink/Source)	Relay Output 2A, 240V AC-2A, 30V DC-2A	Port 1 (USB) Port 2 (CAN) Port 3 (Ethernet)	40 points (24/16)	(*1)	FC6A-C40R1AEJ
						(*2)	FC6A-C40R4AEJ
	24V DC					(*1)	FC6A-C40R1CEJ
						(*2)	FC6A-C40R4CEJ
			Transistor Source Output 0.5A			(*1)	FC6A-C40P1CEJ
						(*2)	FC6A-C40P4CEJ
			Transistor Sink Output 0.5A			(*1)	FC6A-C40K1CEJ
						(*2)	FC6A-C40K4CEJ
	12V DC	12V DC (Sink/Source)	Relay Output 2A, 240V AC-2A, 30V DC-2A			(*1)	FC6A-C40R1DEJ
						(*2)	FC6A-C40R4DEJ
			Transistor Source Output 0.5A			(*1)	FC6A-C40P1DEJ
						(*2)	FC6A-C40P4DEJ
			Transistor Sink Output 0.5A			(*1)	FC6A-C40K1DEJ
						(*2)	FC6A-C40K4DEJ

*1) Screw fastened type *2) Push-in type *3) Only transistor output type

Lineup
Plus
All-in-One
Modules
Cartridges
Dimensions
Mounting Hole Layout
Instructions

Lineup

Digital Input Modules

Package Quantity: 1

Input Points	Terminal	Part No.
8 points DC	Removable, 5.08mm pitch, 11-pin, screw fastened type connector	FC6A-N08B1
	Removable, 5.08mm pitch, 11-pin, Push-in connector	FC6A-N08B4
16 points DC	Removable, 3.81mm pitch, 10-pin, screw fastened type connector	FC6A-N16B1
	Removable, 3.81mm pitch, 10-pin, Push-in connector	FC6A-N16B4
16 points DC	20-pin MIL connector	FC6A-N16B3
32 points DC		FC6A-N32B3
8 points AC	Removable, 5.08mm pitch, 11-pin, screw fastened type connector	FC6A-N08A11
	Removable, 5.08mm pitch, 11-pin, Push-in connector	FC6A-N08A14

Digital Output Modules

Package Quantity: 1

Output Points	Terminal	Part No.
8 points Relay Output	Removable, 5.08mm pitch, 11-pin, screw fastened type connector	FC6A-R081
	Removable, 5.08mm pitch, 11-pin, Push-in connector	FC6A-R084
16 points Relay Output	Removable, 3.81mm pitch, 10-pin, screw fastened type connector	FC6A-R161
	Removable, 3.81mm pitch, 10-pin, Push-in connector	FC6A-R164
8 points Transistor Sink Output	Removable, 5.08mm pitch, 11-pin, screw fastened type connector	FC6A-T08K1
	Removable, 5.08mm pitch, 11-pin, Push-in connector	FC6A-T08K4
8 points Transistor Source Output	Removable, 5.08mm pitch, 11-pin, screw fastened type connector	FC6A-T08P1
	Removable, 5.08mm pitch, 11-pin, Push-in connector	FC6A-T08P4
16 points Transistor Sink Output	Removable, 3.81mm pitch, 10-pin, screw fastened type connector	FC6A-T16K1
	20-pin MIL connector	FC6A-T16K3
	20-pin Push-in connector	FC6A-T16K4
16 points Transistor Source Output	Removable, 3.81mm pitch, 10-pin, screw fastened type connector	FC6A-T16P1
	20-pin MIL connector	FC6A-T16P3
	20-pin Push-in connector	FC6A-T16P4
32 points Transistor Sink Output	20-pin MIL connector	FC6A-T32K3
32 points Transistor Source Output	20-pin MIL connector	FC6A-T32P3

Digital Mixed I/O Modules

Package Quantity: 1

Input	Input	Output	Terminal	Part No.
8 points Mixed I/O	4 points DC inputs (Sink/Source)	4 relay outputs 240V AC, 2A 30V DC, 2A	Removable, 5.08mm pitch, 11-pin, screw fastened type connector	FC6A-M08BR1
			Removable, 5.08mm pitch, 11-pin, Push-in connector	FC6A-M08BR4
24 points Mixed I/O	16 points DC inputs (Sink/Source)	8 relay outputs 240V AC, 2A 30V DC, 2A	Removable, 3.81mm pitch, 11-pin, screw fastened type connector	FC6A-M24BR1
			Removable, 3.81mm pitch, 17-pin, screw fastened type connector	
			Removable, 3.81mm pitch, 11-pin, Push-in connector	FC6A-M24BR4
			Removable, 3.81mm pitch, 17-pin, Push-in connector	

Lineup
Plus
All-in-One
Modules
Cartridges
Dimensions
Mounting Hole Layout
Instructions

Lineup

Analog I/O Modules

Package Quantity: 1

Name	Input	Output	I/O Points	Terminal	Part No.
Analog Input Module	Voltage (0 to 10V, –10 to +10V) Current (0 to 20mA, 4 to 20mA)	—	2 inputs	Removable, 5.08mm pitch, 11-pin, screw fastened type connector	FC6A-J2C1
				Removable, 5.08mm pitch, 11-pin, Push-in connector	FC6A-J2C4
			4 inputs	Removable, 3.81mm pitch, 10-pin, screw fastened type connector	FC6A-J4A1
				Removable, 3.81mm pitch, 10-pin, Push-in connector	FC6A-J4A4
			8 inputs	Removable, 3.81mm pitch, 10-pin, screw fastened type connector	FC6A-J8A1
				Removable, 3.81mm pitch, 10-pin, Push-in connector	FC6A-J8A4
	Voltage (0 to 10V, –10 to +10V) Current (0 to 20mA, 4 to 20mA) Thermocouple (J, K, R, S, B, T, N) Resistance Thermometer (Ni100, Ni1,000, PT100, PT1,000)		4 inputs	Removable, 3.81mm pitch, 10-pin, screw fastened type connector	FC6A-J4CN1
				Removable, 3.81mm pitch, 10-pin, Push-in connector	FC6A-J4CN4
	Thermocouple (K, J, R, S, B, E, T, N, C)		Isolated between channels 4 inputs	Removable, 3.81mm pitch, 10-pin, screw fastened type connector	FC6A-J4CH1Y
				Removable, 3.81mm pitch, 10-pin, Push-in connector	FC6A-J4CH4Y
	Thermocouple (K, J, R, S, B, E, T, N, C) NTC/PTC Thermistor		8 inputs	Removable, 3.81mm pitch, 10-pin, screw fastened type connector	FC6A-J8CU1
				Removable, 3.81mm pitch, 10-pin, Push-in connector	FC6A-J8CU4
Analog Output Module	—	Voltage (0 to 10V, –10 to +10V) Current (0 to 20mA, 4 to 20mA)	2 outputs	Removable, 5.08mm pitch, 11-pin, screw fastened type connector	FC6A-K2A1
				Removable, 5.08mm pitch, 11-pin, Push-in connector	FC6A-K2A4
			4 outputs	Removable, 5.08mm pitch, 11-pin, screw fastened type connector	FC6A-K4A1
				Removable, 5.08mm pitch, 11-pin, Push-in connector	FC6A-K4A4
Analog I/O Module	Voltage (0 to 10V, –10 to +10V) Current (0 to 20mA, 4 to 20mA)	Voltage (0 to 10V, –10 to +10V) Current (0 to 20mA, 4 to 20mA)	4 inputs/2 outputs	Removable, 3.81mm pitch, 10-pin, screw fastened type connector	FC6A-L06A1
				Removable, 3.81mm pitch, 10-pin, Push-in connector	FC6A-L06A4
	Voltage (0 to 10V, –10 to +10V) Current (0 to 20mA, 4 to 20mA) Thermocouple (K, J, R, S, B, E, T, N, C) Resistance Thermometer (Ni100, Ni1,000, PT100, PT1,000)		2 inputs/1 output	Removable, 5.08mm pitch, 11-pin, screw fastened type connector	FC6A-L03CN1
				Removable, 5.08mm pitch, 11-pin, Push-in connector	FC6A-L03CN4

Analog I/O Modules (PID)

Package Quantity: 1

Name	Input	Output	I/O Points	Terminal	Part No.
PID Module	Voltage (0-1V, 0-5V, 1-5V, 0-10V) Current (0-20mA, 4-20mA) Thermocouple (K, J, R, S, B, E, T, N, PL-II, C) Resistance Thermometer (PT100, JPT100)	Relay output	2 analog inputs 2 relay outputs	Removable, 3.81mm pitch 11-pin, screw fastened type connector 17-pin, screw fastened type connector	FC6A-F2MR1
				Removable, 3.81mm pitch 11-pin, Push-in connector 17-pin, Push-in connector	FC6A-F2MR4
		Voltage output (12V, transistor protect source output) Current (4 to 20mA, analog output)	2 analog inputs 2 analog/digital outputs	Removable, 3.81mm pitch 11-pin, screw fastened type connector 17-pin, screw fastened type connector	FC6A-F2M1
				Removable, 3.81mm pitch 11-pin, Push-in connector 17-pin, Push-in connector	FC6A-F2M4

Lineup
Plus
All-in-One
Modules
Cartridges
Dimensions
Mounting Hole Layout
Instructions

Lineup

HMI Module

Package Quantity: 1

Name	Connectable CPU Module			Part No.
	Plus	All-in-One	CAN J1939 All-in-One	
HMI Module	Yes	Yes	Yes	FC6A-PH1

Expansion Interface Module

Package Quantity: 1

Name	Connectable CPU Module			Terminal	Part No.
	Plus	All-in-One	CAN J1939 All-in-One		
Unibody Type	Yes	Yes	Yes	Removable, 5.08mm pitch, screw fastened type connector	FC6A-EXM2
				Removable, 5.08mm pitch, Push-in connector	FC6A-EXM24
Separate Master Type	Yes	No	No		FC6A-EXM1M
Separate Slave Type	Yes	No	No	Removable, 5.08mm pitch, screw fastened type connector	FC6A-EXM1S
				Removable, 5.08mm pitch, Push-in connector	FC6A-EXM1S4

Communication Module

Package Quantity: 1

Name	Connectable CPU Module			Terminal	Part No.
	Plus	All-in-One	J1939 All-in-One		
RS232C/RS485 Communication Module	Yes	Yes	Yes	Removable, 3.81mm pitch, 10-pin, screw fastened type connector	FC6A-SIF52
				Removable, 3.81mm pitch, 10-pin, Push-in connector	FC6A-SIF524

Communication Cartridges

Package Quantity: 1

Name	Connectable CPU Module			Part No.
	Plus	All-in-One	CAN J1939 All-in-One	
RS232C	Yes (*1)	Yes	Yes	FC6A-PC1
RS485	Yes (*1)	Yes	Yes	FC6A-PC3
Bluetooth	Yes (*1)	Yes	Yes	FC6A-PC4

Digital I/O Cartridges

Package Quantity: 1

Name	Connectable CPU Module			I/O Points	Part No.
	Plus	All-in-One	CAN J1939 All-in-One		
Digital Input	Yes (*1)	Yes	Yes	4 inputs	FC6A-PN4
Digital Output	Yes (*1)	Yes	Yes	4 transistor sink outputs	FC6A-PTK4
	Yes (*1)	Yes	Yes	4 transistor source outputs	FC6A-PTS4

Analog I/O Cartridges

Package Quantity: 1

Name	Connectable CPU Module			I/O Points	Part No.
	Plus	All-in-One	CAN J1939 All-in-One		
Analog Voltage/Current Input	Yes (*1)	Yes	Yes	2 inputs	FC6A-PJ2A
Analog Temperature Input					FC6A-PJ2CP
Analog Voltage Output	Yes (*1)	Yes	Yes	2 outputs	FC6A-PK2AV
Analog Current Output					FC6A-PK2AW

Cartridge Base Module

Package Quantity: 1

Name	Connectable CPU Module			Part No.
	Plus	All-in-One	CAN J1939 All-in-One	
Cartridge Base Module	Yes	No	No	FC6A-HPH1

Programming Software

Package Quantity: 1

Name	Part No.
Application Software Automation Organizer Ver. 3.90 or higher WindLDR V.8.6 or higher	SW1A-W1C

*1) When a cartridge base module is added to the left of CPU.

Lineup

Option

Name		Description		Part No.	Package Quantity
Plus CPU Module Terminal Block Connector		3.81mm pitch, 10-pin, screw fastened type for FC6A-D16□□CEE		FC6A-PMTCN10PN02	2
		3.81mm pitch, 11-pin, screw fastened type for FC6A-D16R□CEE		FC6A-PMTCR11PN02	
		3.81mm pitch, 11-pin, screw fastened type for FC6A-D16K□CEE		FC6A-PMTCK11PN02	
		3.81mm pitch, 11-pin, screw fastened type for FC6A-D16P□CEE		FC6A-PMTCP11PN02	
		3.81mm pitch, 10-pin, Push-in type for FC6A-D16□□CEE		FC6A-PMSCN10PN02	
		3.81mm pitch, 11-pin, Push-in type for FC6A-D16R□CEE		FC6A-PMSCR11PN02	
		3.81mm pitch, 11-pin, Push-in type for FC6A-D16K□CEE		FC6A-PMSCK11PN02	
		3.81mm pitch, 11-pin, Push-in type for FC6A-D16P□CEE		FC6A-PMSCP11PN02	
Terminal Block Connector for All-in-One CPU Module/ CAN J1939 All-in-One CPU Module		5.08mm pitch, 8-pin, screw fastened type for FC6A-C24□□□E		FC6A-PMTA08PN02	
		5.08mm pitch, 9-pin, screw fastened type all CPU modules		FC6A-PMTA09PN02	
		5.08mm pitch, 10-pin, screw fastened type for FC6A-C40□□□E□		FC6A-PMTA10PN02	
		5.08mm pitch, 12-pin, screw fastened type for FC6A-C16□□□E		FC6A-PMTA12PN02	
		5.08mm pitch, 13-pin, screw fastened type for FC6A-C24□□□E		FC6A-PMTA13PN02	
		5.08mm pitch, 8-pin, Push-in type for FC6A-C24□□□E		FC6A-PMSA08PN02	
		5.08mm pitch, 9-pin, Push-in type all CPU modules		FC6A-PMSA09PN02	
		5.08mm pitch, 10-pin, Push-in type for FC6A-C40□□□E□		FC6A-PMSA10PN02	
		5.08mm pitch, 12-pin, Push-in type for FC6A-C16□□□E		FC6A-PMSA12PN02	
		5.08mm pitch, 13-pin, Push-in type for FC6A-C24□□□E		FC6A-PMSA13PN02	
CAN J1939 All-in-One CAN Communication Terminal Block Connector		5.08mm pitch, 5-pin, screw fastened type		FC6A-PMTE05PN02	
		5.08mm pitch, 5-pin, Push-in type		FC6A-PMSE05PN02	
Expansion Interface Module Terminal Block Connector		5.08mm pitch, 11-pin, screw fastened type		FC6A-PMTB11PN02	
		5.08mm pitch, 11-pin, Push-in type		FC6A-PMSB11PN02	
		3.81mm pitch, 10-pin, screw fastened type		FC6A-PMTC10PN02	
		3.81mm pitch, 11-pin, screw fastened type		FC6A-PMTC11PN02	
		3.81mm pitch, 17-pin, screw fastened type		FC6A-PMTC17PN02	
		3.81mm pitch, 10-pin, Push-in type		FC6A-PMSC10PN02	
		3.81mm pitch, 11-pin, Push-in type		FC6A-PMSC11PN02	
		3.81mm pitch, 17-pin, Push-in type		FC6A-PMSC17PN02	
MIL Connector for Plus CPU Module/Expansion Module		20-pin MIL connector		FC4A-PMC20PN02	
FC6A CPU Module Power Supply Terminal Block Connector		5.08mm pitch, 3-pin, screw fastened type		FC6A-PMTD03PN02	
		5.08mm pitch, 3-pin, Push-in (For Plus / All-in-One CPU Module, 24V DC)		FC6A-PMSDC03PN02	
		5.08mm pitch, 3-pin, Push-in (For All-in-One CPU Module, 12V DC)		FC6A-PMSDD03PN02	
		5.08mm pitch, 3-pin, Push-in (For All-in-One CPU Module, AC)		FC6A-PMSDA03PN02	
Expansion Interface Module Power Supply Terminal Block Connector for FC6A-EXM2/-EXM1S		5.08mm pitch, 3-pin, screw fastened type		FC6A-PMTB03PN02	
		5.08mm pitch, 3-pin, Push-in		FC6A-PMSB03PN02	
CPU Module Connector with Analog Input Cable		Connector: UL1977 compliant, Wire: UL758 style 1007 compliant		FC4A-PMAC2PN02	
CPU Module Battery Holder				FC6A-BH1PN02	
CPU Module Mounting Hook		Can be used with HMI module		FC6A-PSP1PN05	5
Expansion Module Mounting Hook		Can be used with expansion interface module		FC6A-PSP2PN05	
35-mm-wide DIN Rail		Aluminium, 1m		BAA1000PN10	10
		Steel, 1m		BAP1000PN10	
End Clip				BNL6PN10	
USB Maintenance Cable		2m long, USB-mini B		HG9Z-XCM42	
USB-mini B Port Extension Cable		1m long, USB-mini B		HG9Z-XCE21	
CPU Module Replacement Battery		Coin-Shaped Manganese Dioxide Lithium Battery CR2032W (One battery is supplied)		HG9Z–XR2	
I/O Communication Cable		For connecting HG4G/3G/2G, external device, and general-purpose operator interface to MicroSmart (5m) RJ45 connector: loose wire RJ45 connector: UL1863 compliant Wire: UL758 style 20276 compliant		FC6A-KC1C	1
		For connecting HG4G/3G/2G to MicroSmart: D-sub 9-pin (5m) RJ45 connector: D-sub 9-pin connector RJ45 connector: UL1863 compliant Wire: UL758 style 20276 compliant D-sub connector plastic: UL94-V0		FC6A-KC2C	
I/O Terminal Cable	20-pin	Shielded Wire: UL758 style 20266 compliant MIL connector plastic: UL94-V0	0.5m	FC9Z-H050A20	
			1m	FC9Z-H100A20	
			2m	FC9Z-H200A20	
			3m	FC9Z-H300A20	
		Non-shielded Wire: UL758 style 2651 compliant MIL connector plastic: UL94-V0	0.5m	FC9Z-H050B20	
			1m	FC9Z-H100B20	
			2m	FC9Z-H200B20	
			3m	FC9Z-H300B20	
Instruction Manual	User's Manual	Japanese		FC9Y-B1721	
		English		FC9Y-B1722	
		Simplified Chinese (PDF)		FC9Y-B1723	
	Ladder Programming	Japanese		FC9Y-B1725	
		English		FC9Y-B1726	
		Simplified Chinese (PDF)		FC9Y-B1727	
	All-in-One Plus Communication	Japanese		FC9Y-B1729	
		English		FC9Y-B1730	
		Simplified Chinese (PDF)		FC9Y-B1731	
	PID Module	Japanese		FC9Y-B1733	
		English		FC9Y-B1734	
		Simplified Chinese (PDF)		FC9Y-B1735	

Note: MicroSmart User's manual and other manuals applicable to Automation Organizer can be downloaded from http://www.idec.com/language.

Operating Conditions

Ambient Operating Temperature		-10 to +55 (*1) (no freezing)
Expanded Ambient Operating Temperature		-25 to -10°C, +55 to +65°C (*2) (*3) (no freezing)
Ambient Storage Temperature		-25 to +70°C (no freezing)
Relative Humidity		10 to 95%, no condensation
Storage Humidity		10 to 95%, no condensation
Pollution Degree		2 (IEC60664-1)
Degree of Protection		IP20 (IEC60529)
Atmosphere		No corrosive gas
Altitude or Air Pressure		1,013 to 795 hPa (0 to 2,000 m) during operation
		1,013 to 701 hPa (0 to 3,000 m) during transport
Installation Location		Inside cabinet
Device Class		Open equipment
Overvoltage Category		II
Vibration Resistance	DIN Rail Mount	5 to 8.4 Hz half amplitude 3.5 mm, 8.4 to 150 Hz, acceleration 9.8 m/s2 (1 G), each direction XYZ, 2 hours (IEC/EN 61131-2)
	Panel Mount	
Shock Resistance		147 m/s2 (15 G), 11 ms, XYZ, 3 axes, 6 directions, 3 times each (IEC 61131-2)
EMC Immunity		IEC/EN61131-2, Zone B compatibility

*1) The HMI module (FC6A-PH1) is 0 to 55°C.
*2) Expanded ambient operating temperature is for versions as shown below.

All-in-One CPU Modules	: HV200 or higher
CAN J1939 CPU Modules	: HV200 or higher
Plus CPU Modules	: HV200 or higher
Digital I/O Modules	: V300 or higher
Analog I/O Modules (FC6A-J2C□, -J4A□, -J8A□, -L03CN□, -J4CN□)	: V300 or higher
Analog I/O Modules (FC6A-K2A□, -J8CU□, -J4CH□Y)	: V200 or higher
Expansion Interface Modules	: V200 or higher
Communication Module	: V200 or higher

*3) HMI module (FC6A-PH1), Cartridge Base Module (FC6A-HPH1),
Cartridge (FC6A-PTK4□, -PTS4, -PN4, -PJ2A, -RJ2CP, -PK2AV, -PK2AW, -PC1, -PC3, -PC4),
PID module (FC6A-F2M□, -F2MR□), and some Analog I/O Modules (FC6A-K4A□, -L06A□)
cannot be used under the expanded ambient operating temperature.
Note: Specify a terminal type code in place of □ in the Part No.
1: screw fastened type, 4: Push-in type

Lineup
Plus
All-in-One
Modules
Cartridges
Dimensions
Mounting Hole Layout
Instructions

Plus CPU Modules

Specifications

Part No.	FC6A-D16R□CEE FC6A-D16P□CEE FC6A-D16K□CEE	FC6A-D32P□CEE FC6A-D32K□CEE
Rated Power Voltage	24V DC	
Allowable Voltage Range	20.4 to 28.8V DC (including ripple)	
Maximum Power Consumption (CPU module)	FC6A-D16R□CEE: 2.88W (24V DC) FC6A-D16P□CEE: 2.88W (24V DC) FC6A-D16K□CEE: 2.88W (24V DC) FC6A-D32P□CEE: 3.36W (24V DC) FC6A-D32K□CEE: 3.36W (24V DC)	
Inrush Current	35A maximum	
Allowable Momentary Power Interruption	10 ms (at rated voltage)	
Dielectric Strength	Between power and FE terminals: 500V AC, 1 minute Between transistor output and FE terminals: 500V AC, 1 minute Between power and input terminals: 500V AC, 1 minute Between power and relay output terminals: 2,300V AC, 1 minute Between input and relay output terminals: 2,300V AC, 1 minute	Between input and FE terminals: 500V AC, 1 minute Between relay output and FE terminals: 2,300V AC, 1 minute Between power and transistor output terminals: 500V AC, 1 minute Between input and transistor output terminals: 500V AC, 1 minute
Insulation Resistance	Between power and FE terminals: 100 MΩ or higher (500V DC megger) Between transistor output and FE terminals: 100MΩ or higher (500V DC megger) Between power and input terminals: 100 MΩ or higher (500V DC megger) Between power and relay output terminals: 100 MΩ or higher (500V DC megger) Between input and relay output terminals: 100 MΩ or higher (500V DC megger)	Between input and FE terminals: 100 MΩ or higher (500V DC megger) Between relay output and FE terminals: 100 MΩ or higher (500V DC megger) Between power and transistor output terminals: 100 MΩ or higher (500V DC megger) Between input and transistor output terminals: 100 MΩ or higher (500V DC megger)
Power Supply Wire	UL1007 AWG24-16, UL2464 AWG24-16, UL1015 AWG20-16	
Grounding Wire	UL1007 AWG16	
Ground	D-type ground (Class 3 ground)	
Mounting	DIN rail or panel mounting	
Weight (approx.)	FC6A-D16R1CEE: 290g FC6A-D16R4CEE: 280g FC6A-D16P1CEE: 275g FC6A-D16P4CEE: 265g FC6A-D16K1CEE: 275g FC6A-D16K4CEE: 265g	FC6A-D32P3CEE: 255g FC6A-D32P4CEE: 255g FC6A-D32K3CEE: 255g FC6A-D32K4CEE: 255g

Note: Specify a terminal type code in place of □ in the Part No. (1: screw fastened type, 3: MIL connector type, 4: Push-in type)
Note: For operating conditions, see page 9.

Plus CPU Modules

Lineup
Plus
All-in-One
Modules
Cartridges
Dimensions
Mounting Hole Layout
Instructions

Function Specifications

Note: Limited number of output points can be turned on.
The upper limit varies on the expanded ambient operating temperature (-25 to -10°C, +55 to +65°C).

Part No.		FC6A-D16R□CEE FC6A-D16P□CEE (*4) FC6A-D16K□CEE (*4)	FC6A-D32P□CEE (*4) FC6A-D32K□CEE (*4)
Control System		Stored program system	
Instruction Words	Basic	42	
	Advanced	130	
Program Capacity (*1)		800KB (100,000 steps)	
User Program Download		1,000 times	
Processing Time	Basic Instruction	21μs/1,000 steps	
	END Processing (*2)	1ms maximum	
I/O Points	Input	8 points	16 points
	Output	8 points	16 points
Expansion Module	Expandable Modules	7 modules (*3)	
	Expandable I/O Points	224 points	
Expansion Interface Module	Unibody Type Expandable Modules	8 modules	
	Unibody Type Expandable I/O Points	256 points	
	Separate Type Expandable Modules (*5)	63 modules (separate type master: 1 module maximum, separate type slave: 10 modules maximum)	
	Separate Type Expandable I/O Points (*5)	2,016 points	
Internal Relay		15,400 points	
Special Internal Relay		1,600 points	
Shift Register		256 points	
Data Register		60,000 points	
Non-Retentive Data Register		200,000 points	
Special Data Register		900 points	
Counter		512 points	
Timer (1ms, 10ms, 100ms,1s)		2,000 points	
Clock		Clock accuracy: ±30 sec/month (typical) at 25°C	
RAM Backup	Backup Data	RAM (internal relay, shift register, counter, data register), clock data (*9)	
	Battery (enclosed with product)	Lithium primary battery (part number of enlosed batteries cannot be selected) Panasonic: BR2032 / CR2032A / CR2032B Murata: CR2032X / CR2032W	
	Battery Life	1-year warranty (replacement approx. 4 years (+25°C)) (*10)	
	Replaceability	Replace within one minute after power off (recommended) (*6)	
Self-diagnostic Function		Keep data, user program (ROM) CRC check, timer/counter preset value change check, user program syntax check, user program execution check, watchdog timer check, user program download check, power failure, clock error, data link connection check, expansion bus initialization check, system check, SD memory card transfer check, SD memory card access check	
Input Filter		0 ms (without filter), 3 to 15ms (selectable in increments of 1ms) I14, I15, I16, I17: 3ms	
Catch Input/Interrupt Input		Six inputs I0, I1, I3, I4, I6, I7 (Minimum turn on pulse width: 5μs max./Minimum turn off pulse width: 5μs max.)	
High-speed Counter	Maximum Counting Frequency and High-speed Counter Points	Total 6 points Single/two-phase selectable: 100 kHz (single-phase: 6 points, two-phase: 3 points)	
	Counting Range	0 to 4,294,967,295 (32 bits)	
	Operation Mode	Rotary encoder mode, adding counter mode, frequency measurement mode	
Analog Potentiometer	Quantity	1 point	
	Data Range	0 to 1,000	
Analog Voltage Input	Quantity	1 point	
	Input Voltage Range	0 to 10V	
	Input Impedance	Approx. 100KΩ	
	Digital Resolution	Approx. 4,000 steps (12 bits)	
Pulse Output (transistor output model only)	Quantity	4 points	
	Maximum Output Pulse Frequency	Q0, Q2, Q4, Q6: 100kHz	
	Reversible Control	Single-pulse output mode: 4 axis (Q0-Q7), Dual-pulse output mode: 4 axis (Q0-Q7)	
	PWM Output	Duty cycle 0.1 to 100.0% (increments of 0.1%), Output pulse frequency 15 to 5,000 Hz (increments of 1 Hz): 4 points (Q0, Q2, Q4, Q6) (Adjust 5μs minimum as ON time and 15μs minimum as OFF time.)	
USB Port		USB mini-B (maintenance communication)	
Ethernet Port 1		Maintenance communication (server), user communication TCP (server/client), user communication UDP, Modbus TCP (server/client), Email, Web Server, PING, SNTP, FTP server/client, BACnet/IP, MQTT (*7)	
Ethernet Port 2		Maintenance communication (server), user communication TCP (server/client), user communication UDP, Modbus TCP (server/client), PING, EtherNet/IP™	
Cartridge (option) (*8)		Two cartridges can be added (when using FC6A-HPH1)/One cartridge can be added (when using FC6A-PH1)	
SD Card Slot		Embedded	
HMI Module (option) (*8)		Yes	

Note: Specify a terminal type code in place of □ in the Part No. (1: screw fastened type, 3: MIL connector type, 4: Push-in type)
*1) 1 step equals 8 bytes. *2) Not including expansion I/O service time, counter timer processing time, data link processing time, and interrupt processing time.
*3) A maximum of 5 modules can be connected when using the expansion interface module separate type master. *4) Transistor output model
*5) Communication module cannot be connected. *6) Batteries can be replaced when power is on or replaced while power is supplied from USB bus power
*7) Plus CPU module System software Ver. 1.20 or later. (Included in WindLDR Ver. 8.90 in Automation Organizer Ver. 3.12.0 or later)
*8) Cartridges and HMI Modules cannot be used under the expanded ambient operating temperature (-25 to -10°C, +55 to +65°C).
*9) RAM backup data can be saved in a non-volatile memory using the SD card receipe function.
*10) 1-year warranty conditions include operating environments (temperature/humidity) during power off and power on.

Plus CPU Modules

Specifications

USB Port

Part No.	FC6A-D16R□CEE / FC6A-D16P□CEE / FC6A-D16K□CEE	FC6A-D32P□CEE / FC6A-D32K□CEE
USB Type	USB mini-B	
USB Standard	USB 2.0	
Isolation	Not isolated from the internal circuit	
Communication Function	Maintenance communication to PC	

Note: Specify a terminal type code in place of □ in the Part No. (1: screw fastened type, 3: MIL connector type, 4: Push-in type)

Ethernet Port 1

Part No.	FC6A-D16R□CEE / FC6A-D16P□CEE / FC6A-D16K□CEE	FC6A-D32P□CEE / FC6A-D32K□CEE
Communication Type	IEEE802.3 compliant	
Communication Speed	10BASE-T, 100BASE-TX	
Connector	RJ45	
Cable	CAT. 5 or higher STP	
Maximum Cable Length	100m	
Isolation	Pulse transformer isolation	
Communication Function	Maintenance communication (server), user communication (server/client), user communication UDP, Modbus TCP (server/client), Email, Web Server, PING, SNTP, FTP server/client, BACnet/IP, MQTT	

Note: Specify a terminal type code in place of □ in the Part No. (1: screw fastened type, 3: MIL connector type, 4: Push-in type)

Ethernet Port 2

Part No.	FC6A-D16R□CEE / FC6A-D16P□CEE / FC6A-D16K□CEE	FC6A-D32P□CEE / FC6A-D32K□CEE
Communication Type	IEEE802.3 compliant	
Communication Speed	10BASE-T, 100BASE-TX	
Connector	RJ45	
Cable	CAT. 5 or higher STP	
Maximum Cable Length	100m	
Isolation	Pulse transformer isolation	
Communication Function	Maintenance communication (server), user communication (server/client), user communication UDP, Modbus TCP (server/client), PING, EtherNet/IP™	

Note: Specify a terminal type code in place of □ in the Part No. (1: screw fastened type, 3: MIL connector type, 4: Push-in type)

BACnet/IP

Part No.		FC6A-D16R□CEE / FC6A-D16P□CEE / FC6A-D16K□CEE	FC6A-D32P□CEE / FC6A-D32K□CEE
Supported Port		Ethernet Port 1	
Applicable Standards		ANSI/ASHRAE135-2012	
Standard Specifications	Protocol	BACnet/IP	
	Profile	B-ASC	
	Object Type	Device Object, Analog Input Object, Analog Output Object, Analog Value Object, Binary Input Object, Binary Output Object, Binary Value Object	
	Number of Objects	256 maximum (*1)	
	BIBBs	DS-RP-B, DS-WP-B, DS-RPM-B, DS-WPM-B, DS-COV-B, DS-COVU-B, DM-DDB-B, DM-DOB-B, DM-DCC-B	
	BBMD	None-BBMD Device	
	Virtual Device	No	
	Foreign Device	Yes	
Subscribed COV Function	Number of Requests That Can Be Accepted	256 requests maximum	
Unsubscribed COV Function	Transmission Unit	Every object	
	Transmission Cycle	1 to 65,535 [ms] (*2)	
Foreign Device Function	Registration Method	Registration as needed by registration trigger device	
	Lifetime	0 to 65,535 [s]	
Device Binding Function		• Synchronization between properties and devices (*3) • Data type conversion of Present _Value (*4) • Coefficient conversion of Present _Value (*4)	

Note: Specify a terminal type code in place of □ in the Part No. (1: screw fastened type, 3: MIL connector type, 4: Push-in type)
*1) Device Object is not included. *2) The transmission cycle is set for all objects. *3) The properties of objects created in internal memory are synchronized with specified devices.
*4) Supported objects are Analog Input Object, Analog Output Object, and Analog Value Object.

Plus CPU Modules

Input

Part No.		FC6A-D16R□CEE / FC6A-D16P□CEE / FC6A-D16K□CEE	FC6A-D32P□CEE / FC6A-D32K□CEE
Input Points		8 (8/1 common)	16 (16/1 common)
Rated Input Voltage		24V DC: 24V DC sink/source input signal	
Input Voltage Range		0 to 28.8V DC	
Rated Input Current		High speed input port 5mA/pt, middle/normal speed input port 7mA/pt	
Input Impedance		High speed input port 4.9kΩ, middle/normal speed input port: 3.4kΩ	
Input Delay	Turn ON Time	High speed input port: 5μs + filter value Middle speed input port: 35μs + filter value Normal speed input port: 4.1ms	
	Turn OFF Time	High speed input port: 5us + filter value Middle speed input port: 35us + filter value Normal speed input port: 4.1ms	
Isolation		Between input terminals: Not isolated Internal circuit: Optocoupler-isolated	
Input Type		Type1 (IEC 61131-2)	
External Load for I/O Interconnection		Not needed	
Signal Determination Method		Static	
Effect of Improper Input Connection		Both sinking and sourcing input signals can be connected, therefore reverse connection does not cause damage. If any input exceeding the rated value is applied, permanent damage may be caused.	
Cable Length		3m in compliance with electromagnetic immunity	
Connector	Insertion Durability	100 times	

Note: Specify a terminal type code in place of □ in the Part No. (1: screw fastened type, 3: MIL connector type, 4: Push-in type)

Relay Output

Part No.		FC6A-D16R□CEE
Relay Output Points		8
Output Points per Common Line	COM1	4
	COM2	4
Output Type		1NO
Maximum Load Current	Per Point	2A
	Per Common	COM1: 7A COM2: 7A
Minimum Switching Load		1mA/5V DC (reference value)
Initial Contact Resistance		30 mΩ maximum
Electrical Life		100,000 operations minimum (rated resistive load 1,800 operations/hour)
Mechanical Life		20,000,000 operations minimum (no load 18,000 operations/hour)
Rated Load		Resistive load: 240V AC 2A, 30V DC 2A Inductive load: 240V AC 2A (cos ø = 0.4), 30V DC 2A (L/R =7 ms)
Connector	Insertion Durability	100 times

Note: Specify a terminal type code in place of □ in the Part No. (1: screw fastened type, 4: Push-in type)

Transistor Output

Part No.		FC6A-D16P□CEE / FC6A-D16K□CEE	FC6A-D32P□CEE / FC6A-D32K□CEE
Transistor Output Points		8 (8/1 common)	16 (16/1 common)
Output Type	Transistor Sink	FC6A-D16K□CEE / FC6A-D32K□CEE	
	Transistor Source	FC6A-D16P□CEE / FC6A-D32P□CEE	
Rated Load Voltage		24V DC	
Voltage Tolerance		19.2 to 28.8V DC	
Rated Load Current	Per Point	0.5A	0.1A
	Per Common	4.0A	1.6A
Output Delay	Turn ON Time	High speed input port: 5μs Normal speed input port: 300μs	
	Turn OFF Time	High speed input port: 5μs Normal speed input port: 300μs	
Isolation		Between output terminal and Internal circuit: Optocoupler-isolated Between output terminals: Not isolated	
Voltage Drop (ON Voltage)		1V max (voltage between COM and output terminal when output is on.)	
Inrush Current		1A	0.2A
Leakage Current		0.1mA maximum	
Clamping Voltage		39V ±1V	
Maximum Lamp Load		12W	2.4W
Inductive Load		L/R=10ms (28.8V DC, 1Hz)	
Overcurrent Protection		Transistor Sink Output: No Transistor Source Output: Overcurrent is detected by current limit resistance. (*1)	
External Current Draw		100mA maximum, 24V DC (power voltage at the +V terminal, -V terminal at source)	
Connector	Insertion Durability	100 times	

Note: Specify a terminal type code in place of □ in the Part No. (1: screw fastened type, 3: MIL connector type, 4: Push-in type)

*1) This overcurrent signals consist of one signal per 4 point outputs. When microprocessor gets this overcurrent signal by interrupt input, microprocessor turns off 4pt outputs of this category at fixed time (approx. 1sec).

All-in-One / CAN J1939 All-in-One CPU Modules

Specifications

Part No.		FC6A-C16R□AE FC6A-C16R□CE FC6A-C16P□CE FC6A-C16K□CE FC6A-C16R□DE FC6A-C16P□DE FC6A-C16K□DE	FC6A-C24R□AE FC6A-C24R□CE FC6A-C24P□CE FC6A-C24K□CE	FC6A-C40R□AE FC6A-C40R□CE FC6A-C40P□CE FC6A-C40K□CE FC6A-C40R□DE FC6A-C40P□DE FC6A-C40K□DE	FC6A-C40R□AEJ FC6A-C40R□CEJ FC6A-C40P□CEJ FC6A-C40K□CEJ FC6A-C40R□DEJ FC6A-C40P□DEJ FC6A-C40K□DEJ
Rated Power Voltage		AC: 100 to 240V AC, DC: 24V DC, 12V DC			
Allowable Voltage Range		AC: 85 to 264V AC 24V DC: 20.4 to 28.8V DC (including ripple), 12V DC: 10.2 to 18.0V			
Rated Frequency		AC: 50/60Hz (47 to 63 Hz)			
Maximum Power Consumption (CPU module)	AC	FC6A-C16R□AE: 100-240V AC, 33VA FC6A-C24R□AE: 100-240V AC, 35VA		FC6A-C40R□AE: 100-240V AC, 41VA FC6A-C40R□AEJ: 100-240V AC, 37VA	
	DC	FC6A-C16R□CE: 24V DC 140mA, 3.36W FC6A-C24R□CE: 24V DC 155mA, 3.72W FC6A-C40R□CE: 24V DC 195mA, 4.68W FC6A-C16P□CE: 24V DC 190mA, 4.6W FC6A-C24P□CE: 24V DC 200mA, 4.8W FC6A-C40P□CE: 24V DC 205mA, 5.0W FC6A-C16K□CE: 24V DC 190mA, 4.6W FC6A-C24K□CE: 24V DC 200mA, 4.8W		FC6A-C40K□CE: 24V DC 205mA, 5.0W FC6A-C16R□DE: 12V DC 270mA, 3.24W FC6A-C40R□DE: 12V DC 345mA, 4.14W FC6A-C16P□DE: 12V DC 260mA, 3.12W FC6A-C40P□DE: 12V DC 260mA, 3.12W FC6A-C16K□DE: 12V DC 250mA, 3.0W FC6A-C40K□DE: 12V DC 260mA, 3.12W FC6A-C40R□CEJ: 24V DC 205mA, 5.0W FC6A-C40P□CEJ: 24V DC 175mA, 4.2W FC6A-C40K□CEJ: 24V DC 175mA, 4.2W FC6A-C40R□DEJ: 12V DC 340mA, 4.08W FC6A-C40P□DEJ: 12V DC 320mA, 3.9W FC6A-C40K□DEJ: 12V DC 320mA, 3.9W	
Inrush Current		AC: 40A maximum 24V DC: 35A maximum 12V DC: 35A maximum			
Allowable Momentary Power Interruption		10 ms (at rated voltage)			
Dielectric Strength	AC	Between power and PE terminals: 1,500V AC, 1 minute Between relay output and PE terminals: 2,300V AC, 1 minute Between power and relay output terminals: 2,300V AC, 1 minute		Between input and PE terminals: 1,500V AC, 1 minute Between power and input terminals: 1,500V AC, 1 minute Between input and relay output terminals: 2,300V AC, 1 minute	
	DC	Between power and FE terminals: 500V AC, 1 minute Between transistor output and FE terminals: 500V AC, 1 minute Between power and input terminals: 500V AC, 1 minute Between power and relay output terminals: 2,300V AC, 1 minute Between input and relay output terminals: 2,300V AC, 1 minute		Between input and FE terminals: 500V AC, 1 minute Between relay output and FE terminals: 2,300V AC, 1 minute Between power and transistor output terminals: 500V AC, 1 minute Between input and transistor output terminals: 500V AC, 1 minute	
Insulation Resistance	AC	Between power and PE terminals: 100 MΩ or higher (500V DC megger) Between relay output and PE terminals: 100 MΩ or higher (500V DC megger) Between power and relay output terminals: 100 MΩ or higher (500V DC megger)		Between input and PE terminals: 100 MΩ or higher (500V DC megger) Between power and input terminals: 100 MΩ or higher (500V DC megger) Between input and relay output terminals: 100 MΩ or higher (500V DC megger)	
	DC	Between power and FE terminals: 100 MΩ or higher (500V DC megger) Between transistor output and FE terminals: 100 MΩ or higher (500V DC megger) Between power and input terminals: 100 MΩ or higher (500V DC megger) Between power and relay output terminals: 100 MΩ or higher (500V DC megger) Between input and relay output terminals: 100 MΩ or higher (500V DC megger)		Between input and FE terminals: 100 MΩ or higher (500V DC megger) Between relay output and PE terminals: 100 MΩ or higher (500V DC megger) Between power and transistor output terminals: 100 MΩ or higher (500V DC megger) Between input and transistor output terminals: 100 MΩ or higher (500V DC megger)	
Power Supply Wire		UL1007 AWG24-16, UL2464 AWG24-16, UL1015 AWG20-16			
Grounding Wire		UL1007, AWG16			
Ground		D-type ground (Class 3 ground)			
Mounting		DIN rail or panel mounting			
Weight		FC6A-C16R1AE: 370g FC6A-C16R4AE: 370g FC6A-C16R1CE: 360g FC6A-C16R4CE: 360g FC6A-C16P1CE: 340g FC6A-C16P4CE: 340g FC6A-C16K1CE: 340g FC6A-C16K4CE: 340g FC6A-C16R1DE: 350g FC6A-C16R4DE: 350g FC6A-C16P1DE: 340g FC6A-C16P4DE: 340g FC6A-C16K1DE: 340g FC6A-C16K4DE: 340g	FC6A-C24R1AE: 420g FC6A-C24R4AE: 420g FC6A-C24R1CE: 400g FC6A-C24R4CE: 400g FC6A-C24P1CE: 380g FC6A-C24P4CE: 380g FC6A-C24K1CE: 380g FC6A-C24K4CE: 380g	FC6A-C40R1AE: 560g FC6A-C40R4AE: 565g FC6A-C40R1CE: 530g FC6A-C40R4CE: 535g FC6A-C40P1CE: 480g FC6A-C40P4CE: 485g FC6A-C40K1CE: 480g FC6A-C40K4CE: 485g FC6A-C40R1DE: 560g FC6A-C40R4DE: 565g FC6A-C40P1DE: 530g FC6A-C40P4DE: 535g FC6A-C40K1DE: 530g FC6A-C40K4DE: 535g	FC6A-C40R1AEJ: 560g FC6A-C40R4AEJ: 555g FC6A-C40R1CEJ: 530g FC6A-C40R4CEJ: 525g FC6A-C40P1CEJ: 480g FC6A-C40P4CEJ: 475g FC6A-C40K1CEJ: 480g FC6A-C40K4CEJ: 475g FC6A-C40R1DEJ: 560g FC6A-C40R4DEJ: 555g FC6A-C40P1DEJ: 530g FC6A-C40P4DEJ: 525g FC6A-C40K1DEJ: 530g FC6A-C40K4DEJ: 525g

Note: Specify a terminal type code in place of □ in the Part No. (1: screw fastened type, 4: Push-in type)
Note: For operating conditions, see page 9.

All-in-One / CAN J1939 All-in-One CPU Modules

Lineup
Plus
All-in-One
Modules
Cartridges
Dimensions
Mounting Hole Layout
Instructions

Function Specifications

Note: The maximum number of relay outputs that can be turned on simultaneously is limited.
The upper limit varies on the expanded ambient operating temperature (-25 to -10°C, +55 to +65°C).

Part No.		FC6A-C16R□AE FC6A-C16R□CE FC6A-C16P□CE (*5) FC6A-C16K□CE (*5) FC6A-C16R□DE FC6A-C16P□DE (*5) FC6A-C16K□DE (*5)	FC6A-C24R□AE FC6A-C24R□CE FC6A-C24P□CE (*5) FC6A-C24K□CE (*5)	FC6A-C40R□AE FC6A-C40R□CE FC6A-C40P□CE (*5) FC6A-C40K□CE (*5) FC6A-C40R□DE FC6A-C40P□DE (*5) FC6A-C40K□DE (*5)	FC6A-C40R□AEJ FC6A-C40R□CEJ FC6A-C40P□CEJ (*5) FC6A-C40K□CEJ (*5) FC6A-C40R□DEJ FC6A-C40P□DEJ (*5) FC6A-C40K□DEJ (*5)
Control System		Stored program system			
Instruction Words	Basic	42			
	Advanced	129			
Program Capacity (*1)		384KB (48,000 steps)/72KB (9,000 steps) (*2)			640KB (80,000 steps) 72KB (9,000 steps) (*2)
User Program Download		1,000 times			
Processing Time	Basic Instruction	42μs/1,000 steps			
	END Processing (*3)	1ms maximum			
I/O Points	Input	9 points	14 points	24 points	
	Output	7 points	10 points	16 points	
Expandable Modules		4 modules	7 modules		
Expandable I/O Points with Expansion Modules		128 points	224 points		
Expandable Modules with Unibody Type Expansion Interface Modules		8 modules			
Expandable I/O Points with Expansion Interface Modules		256 points			
Internal Relay		12,400 points			
Special Internal Relay		256 points			
Shift Register		256 points			
Data Register		54,000 points			
Special Data Register		500 points			
Counter		512 points			
Timer (1ms, 10ms, 100ms,1s)		1,024 points			
Clock		Clock accuracy: ±30 sec/month (typical) at 25°C			
RAM Backup	Backup Data	RAM (internal relay, shift register, counter, data register), clock data (*9)			
	Battery (enclosed with products)	Lithium primary battery (part number of enlosed batteries cannot be selected) Panasonic: BR2032 / CR2032A / CR2032B Murata: CR2032X / CR2032W			
	Battery Life	1-year warranty (replacement approx. 4 years (+25°C)) (*10)			
	Replaceability	Replace within one minute after power off (recommended) (*6)			
Self-diagnostic Function		Keep data, user program (ROM) CRC check, timer/counter preset value change check, user program syntax check, user program execution check, watchdog timer check, user program download check, power failure, clock error, data link connection check, expansion bus initialization check, system check, SD memory card transfer check, SD memory card access check			
Input Filter		0 ms (without filter), 3 to 15ms (selectable in increments of 1ms)			
Catch Input/Interrupt Input		Six inputs I0, I1, I6, I7 (Minimum turn on pulse width: 5μs max., Minimum turn off pulse width: 5μs max.) I3, I4 (Minimum turn on pulse width: 35μs max., Minimum turn off pulse width: 35μs max.)			
High-speed Counter	Maximum Counting Frequency and High-speed Counter Points	Total 6 points Single/two-phase selectable: 100 kHz (single-phase: 4 points, two-phase: 2 points) Single-phase: 5 kHz (2 points)			
	Counting Range	0 to 4,294,967,295 (32 bits)			
	Operation Mode	Rotary encoder mode, adding counter mode, frequency measurement mode			
Analog Potentiometer	Quantity	1 point			–
	Data Range	0 to 1,000			–
Analog Voltage Input	Quantity	1 point			–
	Input Voltage Range	0 to 10V			–
	Input Impedance	Approx. 100KΩ			–
	Digital Resolution	Approx. 1,000 steps (10 bits)			–
Pulse Output (transistor output model only)	Quantity	4 points			
	Maximum Output Pulse Frequency	Q0, Q1: 100 kHz Q2, Q3: 5 kHz			Q0, Q2, Q4, Q6: 100 kHz
	Reversible Control	Single-pulse output mode: 2 axis (Q0-Q3) Dual-pulse output mode: 1 axis (Q0-Q1)			Single-pulse output mode: 4 axis (Q0-Q7) Dual-pulse output mode: 4 axis (Q0-Q7)
	PWM Output	Duty cycle 0.1 to 100.0% (increments of 0.1%) Output pulse frequency 15 to 5,000 (increments of 1 Hz): 4 points (Q0-Q3) ∗Q0, Q1: Adjust 5μs minimum as ON time and 15μs minimum as OFF time. ∗Q2, Q3: Adjust 100μs minimum as ON/OFF time.			Dual cycle: 0.1 to 100.0% (increments of 0.1%) Output pulse frequency: 15 to 5,000 (increments of 1 Hz): 4 points (Q0, Q2, Q4, Q6) ∗ Adjust 5μs minimum as ON time and 15μs minimum as OFF time.
External Power Supply for Sensor (*8) (AC only)	Output Voltage/Current	24V (+10%, –15%) / 250mA			
	Overload Detection	Not possible			
	Isolation from the internal circuit	Transformer-isolated			
USB Port		USB mini-B (maintenance communication)			
Serial Port 1, CAN Port		RS232C or RS485 (*4)			CAN J1939
Ethernet Port 1		Ethernet (maintenance communication, user communication, Modbus TCP server/client)			
SD Card Slot		Embedded (*7)			
Cartridge (option) (*8)		One cartridge can be added on CPU module One cartridge can be added on HMI module (FC6A-PH1)		Two cartridges can be added on CPU module One cartridge can be added on HMI module (FC6A-PH1)	
HMI Module (option) (*8)		Yes	Yes	Yes	Yes

Note: Specify a terminal type code in place of □ in the Part No. (1: screw fastened type, 4: Push-in type)
*1) 1 step equals 8 bytes. *2) When 72KB is selected, download function can be used during RUN.
*3) Not including expansion I/O service time, counter timer processing time, data link processing time, and interrupt processing time.
*4) Maintenance communication, user communication, data link, Modbus RTU master/slave communication. *5)Transistor output model
*6) Batteries can be replaced when power is on or replaced while power is supplied from USB bus power *7) SD memory cards (max 2 GB), SDHC memory cards (max 32 GB)
*8) External power supplies for sensor, cartridges and HMI Modules cannot be used under the expanded ambient operating temperature (-25 to -10°C, +55 to +65°C).
*9) RAM backup data can be saved in a non-volatile memory using the SD card receipe function.
*10) 1-year warranty conditions include operating environments (temperature/humidity) during power off and power on.

All-in-One / CAN J1939 All-in-One CPU Modules

Specifications

USB Port

Part No.	FC6A-C16R□AE FC6A-C16R□CE FC6A-C16P□CE FC6A-C16K□CE FC6A-C16R□DE FC6A-C16P□DE FC6A-C16K□DE	FC6A-C24R□AE FC6A-C24R□CE FC6A-C24P□CE FC6A-C24K□CE	FC6A-C40R□AE FC6A-C40R□CE FC6A-C40P□CE FC6A-C40K□CE FC6A-C40R□DE FC6A-C40P□DE FC6A-C40K□DE	FC6A-C40R□AEJ FC6A-C40R□CEJ FC6A-C40P□CEJ FC6A-C40K□CEJ FC6A-C40R□DEJ FC6A-C40P□DEJ FC6A-C40K□DEJ
USB Type	USB mini-B			
USB Standard	USB 2.0 full speed			
Isolation	Not isolated from the internal circuit			
Communication Function	Maintenance communication to PC			

Note: Specify a terminal type code in place of □ in the Part No. (1: screw fastened type, 4: Push-in type)

Serial Port 1, CAN Port

Part No.	FC6A-C16R□AE FC6A-C16R□CE FC6A-C16P□CE FC6A-C16K□CE FC6A-C16R□DE FC6A-C16P□DE FC6A-C16K□DE	FC6A-C24R□AE FC6A-C24R□CE FC6A-C24P□CE FC6A-C24K□CE	FC6A-C40R□AE FC6A-C40R□CE FC6A-C40P□CE FC6A-C40K□CE FC6A-C40R□DE FC6A-C40P□DE FC6A-C40K□DE	FC6A-C40R□AEJ FC6A-C40R□CEJ FC6A-C40P□CEJ FC6A-C40K□CEJ FC6A-C40R□DEJ FC6A-C40P□DEJ FC6A-C40K□DEJ
Port Type	Serial port 1			CAN port
Communication Type	RS232C or RS485 selectable			CAN
Connector	RJ45			Terminal Block (5-pin)
Cable	CAT. 5 or higher STP			SAE J1939-11/SAE J1939-15
Maximum Baud Rate Maximum Cable Length	115,200 bps RS232C: 5m, RS485: 200m			SAE J1939-11: 250 kbps: 40m, stubs, 1m maximum SAE J1939-15: 250 kbps: 40m, stubs, 3m maximum
Isolation	Not isolated from the internal circuit			Isolated from the internal circuit
Communication Function	Maintenance communication, user communication, Modbus RTU (master/slave)			J1939

Note: Specify a terminal type code in place of □ in the Part No. (1: screw fastened type, 4: Push-in type)

Ethernet Port 1

Part No.	FC6A-C16R□AE FC6A-C16R□CE FC6A-C16P□CE FC6A-C16K□CE FC6A-C16R□DE FC6A-C16P□DE FC6A-C16K□DE	FC6A-C24R□AE FC6A-C24R□CE FC6A-C24P□CE FC6A-C24K□CE	FC6A-C40R□AE FC6A-C40R□CE FC6A-C40P□CE FC6A-C40K□CE FC6A-C40R□DE FC6A-C40P□DE FC6A-C40K□DE	FC6A-C40R□AEJ FC6A-C40R□CEJ FC6A-C40P□CEJ FC6A-C40K□CEJ FC6A-C40R□DEJ FC6A-C40P□DEJ FC6A-C40K□DEJ
Communication Type	IEEE802.3 compliant			
Data Transfer	10BASE-T, 100BASE-TX			
Connector	RJ45			
Cable	CAT. 5 or higher STP			
Maximum Cable Length	100m			
Isolation	Pulse transformer isolation			
Communication Function	Maintenance communication server, User communication (server/client), Modbus TCP (server/client), PING, SNTP			

Note: Specify a terminal type code in place of □ in the Part No. (1: screw fastened type, 4: Push-in type)

CAN J1939

Part No.			FC6A-C40P□CEJ FC6A-C40P□DEJ	FC6A-C40K□CEJ FC6A-C40K□DEJ	FC6A-C40R□AEJ FC6A-C40R□DEJ	FC6A-C40R□CEJ
Supported SAE J1939			SAE J1939-11: Physical Layer, 250K bits/s, Twisted Shielded Pair SAE J1939-15: Reduced Physical Layer, 250K bits/s, Unshielded Twisted Pair SAE J1939-21: Data Link Layer		SAE J1939-71: Vehicle Application Layer SAE J1939-73: Application Layer - Diagnostics SAE J1939-75: Application Layer - Generator Sets and Industrial SAE J1939-81: Network Management	
Transmit/ Receive Message	Maximum No. of Send Message		100			
	Maximum No. of Receive Message		200			
	Transmittable PGN		Optional			
	Maximum Length of Transmit/Receive Message		1 to 252 bytes/message			
Transmission Function	Transmission Type		Event transmission/periodical transmission			
	Event Transmission	Transmission Method	Internal relay			
	Cycle Transmission	Transmission Method	Internal relay			
		Transmission Cycle (*1)	10 to 655,350 ms (in increments of 10ms)			
Receive Function	Receive Method		Polling reception (*2)			
	Receive Cycle Monitor		0, 10 to 655,350 ms (disabled at 0)			
Request Function			Yes			
Network Management Function			Static address/dynamic address management			
	NAME		Optional (automatic switching of static address /dynamic address management at highest-order bit)			
	Number of Nodes Manageable		128 nodes			
PGNs used Internally			00EA00h: Request PGN			
			00E800h: Acknowledgement			
			00EB00h: TP.DT			
			00EC00h: TP.CM			
			00EE00h: Address claim			

Note: Specify a terminal type code in place of □ in the Part No. (1: screw fastened type, 4: Push-in type)
*1) Message is transmitted in END processing. Actual transmission cycle is affected by the ladder execution cycle.
*2) Receive message is transferred from internal buffer to data register in END processing.

All-in-One / CAN J1939 All-in-One CPU Modules

Lineup
Plus
All-in-One
Modules
Cartridges
Dimensions
Mounting Hole Layout
Instructions

Input

Part No.		FC6A-C16R□AE FC6A-C16R□CE FC6A-C16P□CE FC6A-C16K□CE FC6A-C16R□DE FC6A-C16P□DE FC6A-C16K□DE	FC6A-C24R□AE FC6A-C24R□CE FC6A-C24P□CE FC6A-C24K□CE	FC6A-C40R□AE FC6A-C40R□CE FC6A-C40P□CE FC6A-C40K□CE FC6A-C40R□DE FC6A-C40P□DE FC6A-C40K□DE	FC6A-C40R□AEJ FC6A-C40R□CEJ FC6A-C40P□CEJ FC6A-C40K□CEJ FC6A-C40R□DEJ FC6A-C40P□DEJ FC6A-C40K□DEJ
Input Points		9 (9/1 common)	14 (14/1 common)	24 (24/1 common)	
Rated Input Voltage (*1)		AC, 24V DC power supply type: 24V DC sink/source input signal 12V DC power supply type: 12V DC sink/source input signal			
Input Voltage Range (*1)		AC, 24V DC power supply type: 0 to 28.8V DC 12V DC power supply type: 0 to 18.0V DC			
Rated Input Current (*1)		AC, 24V DC power supply type: high speed input port 5mA/pt, middle/normal speed input port 7mA/pt 12V DC power supply type: high speed input port 5mA/pt, middle/normal speed input port 6mA/pt			
Input Impedance (*1)		AC, 24V DC power supply type: high speed input port 4.9kΩ, middle/normal speed input port: 3.4kΩ 12V DC power supply type: high speed input port 1.8kΩ, middle/normal speed input port: 2.0kΩ			
Input Delay	Turn ON Time	High speed input port: 5μs + filter value Middle speed input port: 35μs + filter value Normal speed input port: 35μs + filter value			
	Turn OF Time	High speed input port: 5us + filter value Middle speed input port: 35us + filter value Normal speed input port: 100us + filter value			
Isolation		Between input terminals: Not isolated Internal circuit: Optocoupler-isolated			
Input Type		Type1 (IEC 61131-2)			
External Load for I/O Interconnection		Not needed			
Signal Determination Method		Static			
Effect of Improper Input Connection		Both sinking and sourcing input signals can be connected, therefore reverse connection does not cause damage. If any input exceeding the rated value is applied, permanent damage may be caused.			
Cable Length		3m in compliance with electromagnetic immunity			
Connector	Insertion Durability	100 times			

Note: Specify a terminal type code in place of □ in the Part No. (1: screw fastened type, 4: Push-in type)
*1) 24V DC is for FC6A-C***□CE and FC6A-C40*□CEJ. 12V DC is for FC6A-C***□DE and FC6A-C40*□DEJ.

Transistor Output

Part No.		FC6A-C16P□CE FC6A-C16K□CE FC6A-C16P□DE FC6A-C16K□DE	FC6A-C24P□CE FC6A-C24K□CE	FC6A-C40P□CE FC6A-C40K□CE FC6A-C40P□DE FC6A-C40K□DE	FC6A-C40P□CEJ FC6A-C40K□CEJ FC6A-C40P□DEJ FC6A-C40K□DEJ
Transistor Output Points		7 (7/1 common)	10 (10/1 common)	16 (8/1 common)	
Output Type	Transistor Sink	FC6A-C16K□CE / FC6A-C16K□DE / FC6A-C24K□CE / FC6A-C40K□CE / FC6A-C40K□DE / FC6A-C40K□CEJ / FC6A-C40K□DEJ			
	Transistor Source	FC6A-C16P□CE / FC6A-C16P□DE / FC6A-C24P□CE / FC6A-C40P□CE / FC6A-C40P□DE / FC6A-C40P□CEJ / FC6A-C40P□DEJ			
Rated Load Voltage (*1)		24V DC power supply type: 24V DC 12V DC power supply type: 12V DC			
Voltage Tolerance (*1)		24V DC power supply type: 19.2 to 28.8V DC 12V DC power supply type: 10.2 to 18.0V DC			24V DC: 19.2 to 28.8V DC 12V DC: 10.2 to 16.0V DC
Rated Load Current	Per Point	0.5A			
	Per Common	3.5A	5A	4A	
Output Delay	Turn ON Time	High speed input port: 5μs Middle speed input port: 30μs Normal speed input port: 300μs			High speed input port: 5μs Normal speed input port: 300μs
	Turn OFF Time	High speed input port: 5μs Middle speed input port: 30μs Normal speed input port: 300μs			High speed input port: 5μs Normal speed input port: 300μs
Isolation		Between output terminal and Internal circuit: Optocoupler-isolated Between output terminals: Not isolated			
Voltage Drop (ON Voltage)		1V max (voltage between COM and output terminal when output is on.)			
Inrush Current		1A			
Leakage Current		0.1mA maximum			
Clamping Voltage (*1)		24V DC power supply type: 39V ±1V 12V DC power supply type: 39V ±1V			24V DC: 39V ±1V 12V DC: 27V ±1V
Maximum Lamp Load		12W			
Inductive Load (*1)		24V DC power supply type: L/R=10ms (28.8V DC, 1Hz) 12V DC power supply type: FC6A-C16P□DE / FC6A-C16K□DE / FC6A-C40P□DE / FC6A-C40K□DE, L/R=10ms (18.0V DC 1Hz), FC6A-C40P□DEJ / FC6A-C40K□DEJ, L/R=10ms (16.0V DC, 1Hz)			
Overcurrent Protection		Transistor Sink Output: No Transistor Source Output: Overcurrent is detected by current limit resistance. (*2)			
External Current Draw (*1)		24V DC power supply type: 100mA maximum, 24V DC (power voltage at the +V terminal, -V terminal at source) 12V DC power supply type: 100mA maximum, 12V DC (power voltage at the +V terminal, -V terminal at source)			
Connector	Insertion Durability	100 times			

Note: Specify a terminal type code in place of □ in the Part No. (1: screw fastened type, 4: Push-in type)
*1) 24V DC is for FC6A-C***□CE and FC6A-C40*□CEJ. 12V DC is for FC6A-C***□DE and FC6A-C40*□DEJ.
*2) This overcurrent signals consist of one signal per 4 point outputs. When microprocessor gets this overcurrent signal by interrupt input, microprocessor turns off 4pt outputs of this category at fixed time (approx. 1sec).

Plus CPU Modules / All-in-One / CAN J1939 All-in-One CPU Modules

Relay Output Specifications

Part No.		FC6A-C16R□AE FC6A-C16R□CE FC6A-C16R□DE	FC6A-C24R□AE FC6A-C24R□CE	FC6A-C40R□AE FC6A-C40R□CE FC6A-C40R□DE	FC6A-C40R□AEJ FC6A-C40R□CEJ FC6A-C40R□DEJ
Relay Output Points		7	10	16	
Output Points per Common Line	COM1	4	4	4	
	COM2	3	4	4	
	COM3	—	2	4	
	COM4	—	—	4	
Output Type		1NO			
Maximum Load Current	Per Point	2A			
	Per Common	COM1: 7A COM2: 6A	COM1: 7A COM2: 7A COM3: 4A	COM1: 7A COM2: 7A COM3: 7A COM4: 7A	
Minimum Switching Load		1mA/5V DC (reference value)			
Initial Contact Resistance		30 mΩ maximum			
Electrical Life		100,000 operations minimum (rated resistive load 1,800 operations/hour)			
Mechanical Life		20,000,000 operations minimum (no load 18,000 operations/hour)			
Rated Load		Resistive load: 240V AC 2A, 30V DC 2A Inductive load: 240V AC 2A (cos ø = 0.4), 30V DC 2A (L/R =7 ms)			
Dielectric Strength		Between output and ground terminals: 2,300V AC, 1 minute Between output terminal and internal circuit: 2,300V AC, 1 minute Between output terminals (COMs): 2,300V AC, 1 minute			
Connector	Insertion/ Removal Durability	100 times			

Note: Specify a terminal type code in place of □ in the Part No. (1: screw fastened type, 3: MIL connector type, 4: Push-in type)

Plus CPU Modules / All-in-One / CAN J1939 All-in-One CPU Modules

Lineup
Plus
All-in-One
Modules
Cartridges
Dimensions
Mounting Hole Layout
Instructions

Temperature derating curves: Input voltage vs. I/O Simultaneous ON Ratio (%)

Plus CPU Module

Input

FC6A-D16P□CEE
FC6A-D16K□CEE
FC6A-D32P□CEE
FC6A-D32K□CEE

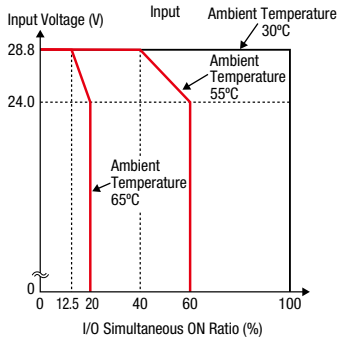

Output

FC6A-D16P□CEE
FC6A-D16K□CEE
FC6A-D32P□CEE
FC6A-D32K□CEE

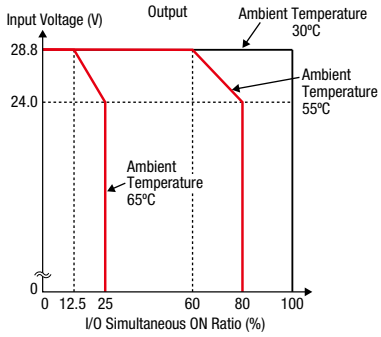

Input

FC6A-D16R□CEE

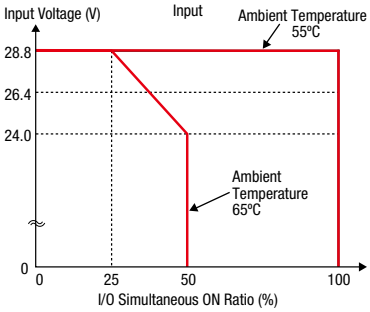

Output

FC6A-D16R□CEE

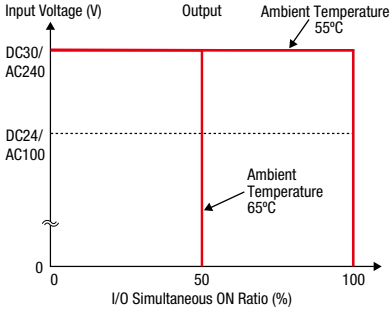

All-in-One / CAN J1939 All-in-One CPU Module (without cartridge)

Input

FC6A-C16R□AE
FC6A-C16R□CE
FC6A-C24R□AE
FC6A-C24R□CE
FC6A-C40R□AE
FC6A-C40R□CE
FC6A-C40R□AEJ
FC6A-C40R□CEJ

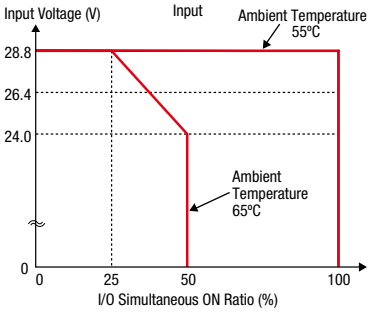

Output

FC6A-C16R□AE
FC6A-C16R□CE
FC6A-C24R□AE
FC6A-C24R□CE
FC6A-C40R□AE
FC6A-C40R□CE
FC6A-C40R□AEJ
FC6A-C40R□CEJ

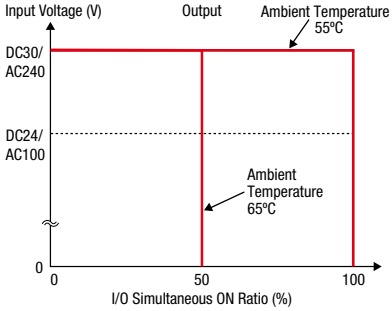

Input

FC6A-C16R□DE
FC6A-C40R□DE
FC6A-C40R□DEJ

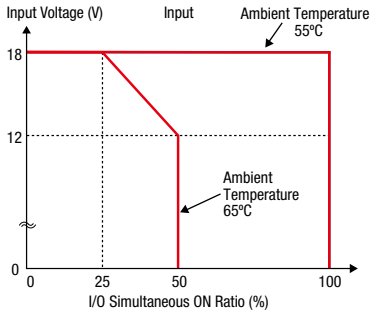

Output

FC6A-C16R□DE
FC6A-C40R□DE
FC6A-C40R□DEJ

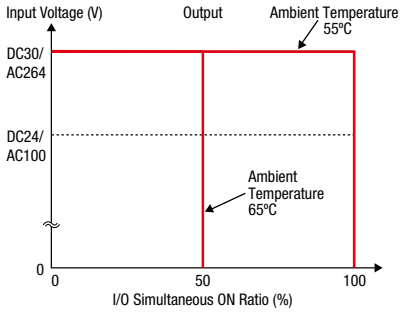

Input

FC6A-C16P□DE
FC6A-C24P□CE
FC6A-C40P□CE
FC6A-C40P□DE
FC6A-C40P□CEJ
FC6A-C40P□DEJ

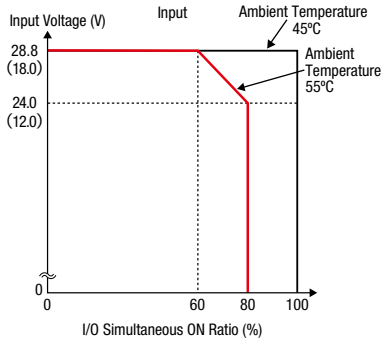

Output

FC6A-C16P□DE
FC6A-C24P□CE
FC6A-C40P□CE
FC6A-C40P□DE
FC6A-C40P□CEJ
FC6A-C40P□DEJ

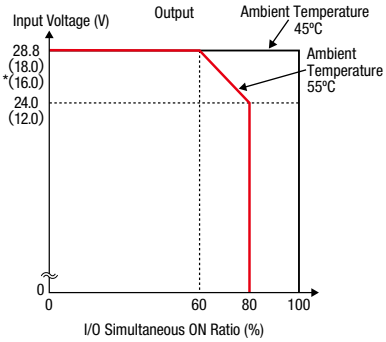

Note: Specify a terminal type code in place of □ in the Part No. (1: screw fastened type, 3: MIL connector type, 4: Push-in type)
• Values in ( ) are for 12V DC model.
• Values shown in *( ) are for CAN J1939 All-in-One CPU module.

All-in-One / CAN J1939 All-in-One CPU Modules

All-in-One / CAN J1939 All-in-One CPU Module (with cartridge or when used under ambient temperature exceeding 55°C)

Input

FC6A-C16P□DE FC6A-C40P□CEJ
FC6A-C24P□CE FC6A-C40P□DEJ
FC6A-C40P□CE
FC6A-C40P□DE

• 24V DC

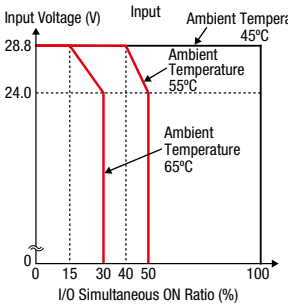

• 12V DC

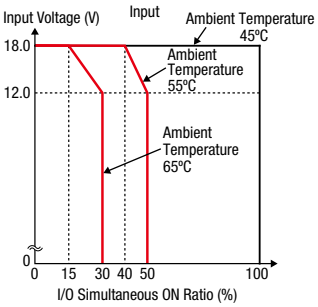

Output

FC6A-C16P□DE FC6A-C40P□CEJ
FC6A-C24P□CE FC6A-C40P□DEJ
FC6A-C40P□CE
FC6A-C40P□DE

• 24V DC

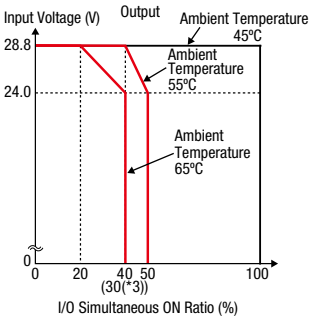

• 12V DC

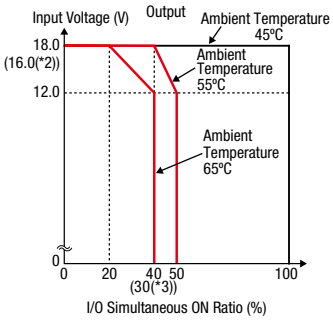

Input

FC6A-C16K□CE FC6A-C40K□DE
FC6A-C16K□DE FC6A-C40K□CEJ
FC6A-C24K□CE FC6A-C40K□DEJ
FC6A-C40K□CE

• 24V DC

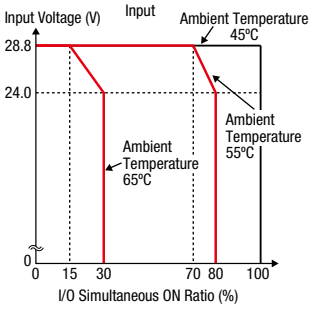

• 12V DC

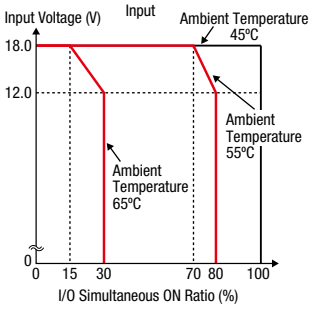

Output

FC6A-C16K□CE FC6A-C40K□DE
FC6A-C16K□DE FC6A-C40K□CEJ
FC6A-C24K□CE FC6A-C40K□DEJ
FC6A-C40K□CE

• 24V DC

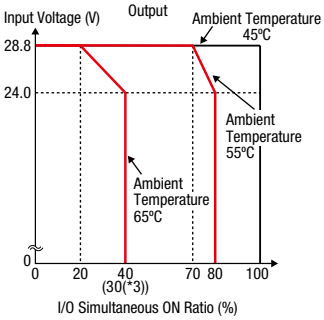

• 12V DC

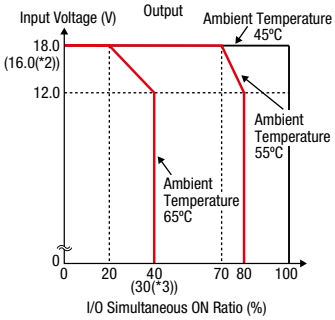

Note: Specify a terminal type code in place of □ in the Part No. (1: screw fastened type, 4: Push-in type)
*1) Cartridges cannot be used under the expanded ambient operating temperature (-25 to -10°C, +55 to +65°C).
*2) Values shown in ( ) are for CAN J1939 All-in-One CPU module.
*3) Values shown in ( ) are for 16 I/O type All-in-One CPU module.

Input Internal Circuit

100V to 240V AC, 24V DC, 12V DC

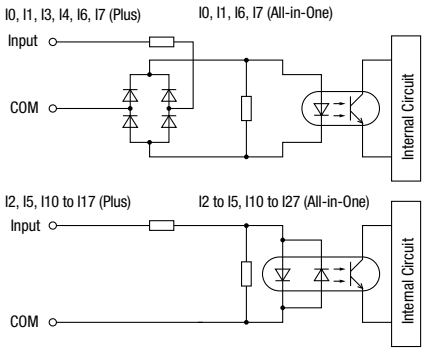

Output Internal Circuit

Transistor Sink Output

24V DC, 12V DC

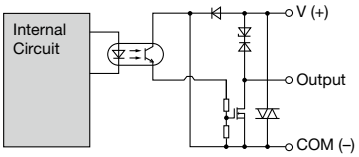

Transistor Source Output

24V DC, 12V DC

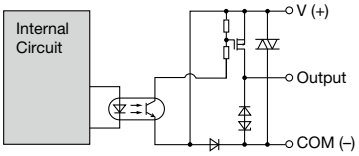

Digital I/O Modules

Specifications

Digital Input Module

Part No.		FC6A-N08B□	FC6A-N16B□	FC6A-N16B3	FC6A-N32B3	FC6A-N08A1□
Input Points		8 (8/1 common)	16 (16/1 common)		32 (16/1 common)	8 (4/1 common)
Rated Input Voltage		12/24V DC sink/source input signal (24V DC for products lower than V400)				100 to 120V AC
Input Voltage Range		0 to 28.8V DC				0 to 132V AC (50/60 Hz)
Rated Input Current		7 mA/point (24V DC), 3.5 mA/point (12V DC)		5 mA/point (24V DC), 2.5 mA/point (12V DC)		17 mA/point (120V AC, 60 Hz)
Input Impedance		3.4 kΩ		4.4 kΩ		0.8 kΩ (60 Hz)
OFF Voltage		5V maximum				20V maximum
ON Voltage		10.2V minimum (15V for products lower than V400)				79V minimum
OFF Current		1.2 mA maximum		0.9 mA maximum		—
ON Current		2.8 mA minimum (4.2 mA minimum for products lower than V400)		2.2 mA minimum (3.2 mA minimum for products lower than V400)		—
Input Delay Time (24V DC)		Turn ON: 4.1ms, Turn OFF: 4.1ms				Turn ON: 25ms, Turn OFF: 30ms
Isolation		Between input terminals: Not isolated Internal circuit: Optocoupler-isolated				Between input terminals in the same common: Not isolated Between input terminals in different commons: Isolated Between input terminals and internal circuits: Optocoupler-isolated
External Load for I/O Interconnection		Not needed				
Signal Determination Method		Static				
Effect of Improper Input Connection		Both sink and source input signals can be connected. If any input exceeding the rated value is applied, permanent damage may be caused.				If any input exceeding the rated value is applied, permanent damage may be caused.
Cable Length		3m in compliance with electromagnetic immunity				—
Internal Current Draw	All Inputs ON	30mA (5V DC) 0mA (24V DC)	40mA (5V DC) 0mA (24V DC)	40mA (5V DC) 0mA (24V DC)	65mA (5V DC) 0mA (24V DC)	40mA (5V DC) 0mA (24V DC)
	All Inputs OFF	17mA (5V DC) 0mA (24V DC)	17mA (5V DC) 0mA (24V DC)	17mA (5V DC) 0mA (24V DC)	17mA (5V DC) 0mA (24V DC)	17mA (5V DC) 0mA (24V DC)
Internal Power Consumption (at 24V DC while all inputs ON)		0.20W	0.27W	0.27W	0.44W	0.27W
Connector	Connector Insertion/ Removal Durability	100 times				
Weight (approx.)		FC6A-N08B1: 110g FC6A-N08B4: 95g	FC6A-N16B1: 105g FC6A-N16B4: 95g	75g	110g	FC6A-N08A11: 110g FC6A-N08A14: 95g

Note: Specify a terminal type code in place of □ in the Part No. (1: screw fastened type, 4: Push-in type)
Note: For operating conditions, see page 9.

Lineup
Plus
All-in-One
Modules
Cartridges
Dimensions
Mounting Hole Layout
Instructions

Digital I/O Modules

Relay Output Module

Part No.		FC6A-R08□	FC6A-R16□
Output Points		8 (4/1 common)	16 (8/1 common)
Output Type		1NO	
Maximum Load Current		2A per point	
		7A per common	8A per common
Minimum Switching Load		1 mA/ 5V DC (reference value)	
Initial Contact Resistance		30 mΩ maximum	
Electrical Life		100,000 operations minimum (rated resistive load 1,800 operations/hour)	
Mechanical Life		20,000,000 operations minimum (no load 18,000 operations/hour)	
Rated Load		Resistive load: 240V AC 2A, 30V DC 2A Inductive load: 240V AC 2A (cos ø = 0.4) 30V DC 2A (L/R =7 ms)	
Dielectric Strength		Between output and ground terminals: 2,300V AC, 1 minute Between output terminal and internal circuit: 2,300V AC, 1 minute Between output terminals (COMs): 2,300V AC, 1 minute	
Internal Current Draw	All outputs ON	35mA (5V DC) 50mA (24V DC)	50mA (5V DC) 100mA (24V DC)
	All outputs OFF	17mA (5V DC) 0mA (24V DC)	17mA (5V DC) 0mA (24V DC)
Internal Power Consumption (at 24V DC while all outputs ON)		1.44W	2.74W
Connector	Insertion/Removal Durability	100 times	
Weight (approx.)		FC6A-R081: 130g FC6A-R084: 115g	FC6A-R161: 140g FC6A-R164: 130g

Note: Specify a terminal type code in place of □ in the Part No. (1: screw fastened type, 4: Push-in type)
Note: For operating conditions, see page 9.

Transistor Output Module

Part No.		FC6A-T08K□	FC6A-T08P□	FC6A-T16K□	FC6A-T16P□	FC6A-T16K3	FC6A-T16P3	FC6A-T32K3	FC6A-T32P3
Output Points		8 (8/1 common)		16 (16/1 common)				32 (16/1 common)	
Output Type		FC6A-T□K□: Transistor sink output FC6A-T□P□: Transistor source output							
Rated Load Voltage		12/24V DC	24V	12/24V DC	24V	12/24V DC	24V	12/24V DC	24V
Operating Load Voltage Range		10.2 to 28.8V DC	20.4 to 28.8V DC	10.2 to 28.8V DC	20.4 to 28.8V DC	10.2 to 28.8V DC	20.4 to 28.8V DC	10.2 to 28.8V DC	20.4 to 28.8V DC
Maximum Load Current		0.5A per point				0.1A per point			
		3A per common				1A per common			
Output Delay	Turn ON Time	400 µs maximum							
	Turn OFF Time	450 µs maximum							
Isolation		Between output terminal and internal circuit: Optocoupler-isolated Between output terminals: Not isolated							
Voltage Drop (ON Voltage)		1V maximum (voltage between COM and output terminals when output is on)							
Inrush Current		1A maximum							
Leakage Current		0.1mA maximum							
Clamping Voltage		Approx. 50V							
Maximum Lamp Load		12W				2.4W			
Inductive Load		L/R = 10ms (28.8V DC 1Hz)							
External Current Draw		FC6A-T□K□: 100 mA maximum, 12/24V DC (power voltage at the +V terminal) FC6A-T□P□: 100 mA maximum, 24V DC (power voltage at the –V terminal)							
Overcurrent Protection		Transistor Sink Output: No Transistor Source Output: Yes							
Internal Current Draw	All outputs ON	25mA (5V DC) 15mA (24V DC)		30mA (5V DC) 25mA (24V DC)				45mA (5V DC) 50mA (24V DC)	
	All outputs OFF	17mA (5V DC) 0mA (24V DC)		17mA (5V DC) 0mA (24V DC)				17mA (5V DC) 0mA (24V DC)	
Internal Power Consumption (at 24V DC while all outputs ON)		0.53W		0.80W				1.50W	
Connector	Insertion/ Removal Durability	100 times							
Weight (approx)		FC6A-T08K1/ FC6A-T08P1: 110g		FC6A-T16K1/ FC6A-T16P1: 105g		75g		115g	
		FC6A-T08K4/ FC6A-T08P4: 95g		FC6A-T16K4/ FC6A-T16P4: 95g					

Note: Specify a terminal type code in place of □ in the Part No. (1: screw fastened type, 4: Push-in type)
Note: For operating conditions, see page 9.

Digital I/O Modules

Digital Mixed I/O Module

	Part No.		FC6A-M08BR☐	FC6A-M24BR☐
Input Specification	Input Points		4 (4/1 common)	16 (16/1 common)
	Rated Input Voltage		12/24V DC sink/source input signal (24V DC for products lower than V400)	
	Input Voltage Range		0 to 28.8V DC	
	Rated Input Current		7 mA/point (24V DC) 3.5 mA/point (12V DC)	
	Input Impedance		3.4 kΩ	
	OFF Voltage		5V maximum	
	ON Voltage		10.2V minimum (15V minimum for products lower than V400)	
	OFF Current		1.2 mA maximum	
	ON Current		2.8 mA minimum (4.2 mA minimum for products lower than V400)	
	Input Delay Time (24V DC)	Turn ON Time	4.1ms	
		Turn OFF Time	4.1ms	
	Isolation		Between input terminals: Not isolated Internal circuit: Optocoupler-isolated	
	External Load for I/O Interconnection		Not needed	
	Signal Determination Method		Static	
	Effect of Improper Input Connection		Both sinking and sourcing input signals can be connected. If any input exceeding the rated value is applied, permanent damage may be caused.	
	Cable Length		3m in compliance with electromagnetic immunity	
Output Specifications	Output Points		4 (4/1 common)	8 (4/1 common)
	Output Type		1NO	
	Maximum Load Current		2A per point 7A per common	
	Minimum Switching Load		1 mA/ 5V DC (reference value)	
	Initial Contact Resistance		30 mΩ maximum	
	Electrical Life		100,000 operations minimum (rated resistive load 1,800 operations/hour)	
	Mechanical Life		20,000,000 operations minimum (no load 18,000 operations/hour)	
	Rated Load		Resistive load: 240V AC 2A, 30V DC 2A Inductive load: 240V AC 2A (cos ø = 0.4), 30V DC 2A (L/R =7 ms)	
	Dielectric Strength		Between output and ground terminals: 2,300V AC, 1 minute Between output terminal and internal circuit: 2,300V AC, 1 minute Between output terminals (COMs): 2,300V AC, 1 minute	
	Internal Current Draw	All I/Os ON	30mA (5V DC), 25mA (24V DC)	55mA (5V DC), 25mA (24V DC)
		All I/Os OFF	17mA (5V DC), 0mA (24V DC)	17mA (5V DC), 0mA (24V DC)
	Internal Power Consumption (at 24V DC while all I/Os are ON)		0.80W	0.97W
	Connector	Insertion/Removal Durability	100 times	
	Weight (approx.)		FC6A-M08BR1: 120g FC6A-M08BR4: 100g	FC6A-M24BR1: 165g FC6A-M24BR4: 155g

Note: Specify a terminal type code in place of ☐ in the Part No. (1: screw fastened type, 4: Push-in type)
Note: For operating conditions, see page 9.

Temperature derating curves: Input voltage vs. I/O Simultaneous ON Ratio (%)

FC6A-N08B☐

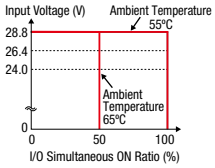

FC6A-N16B☐

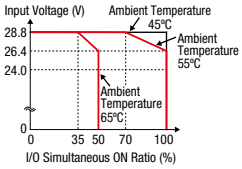

FC6A-N16B3 / FC6A-N32B3

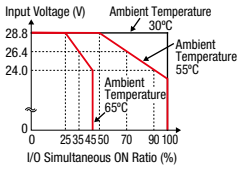

FC6A-N08A1☐

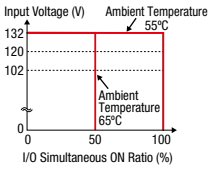

FC6A-M08BR☐

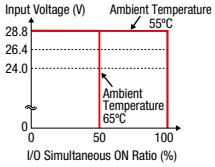

FC6A-M24BR☐

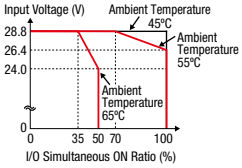

Input Internal Circuit

FC6A-N08B☐ / FC6A-N16B☐

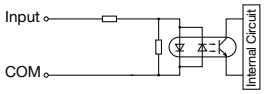

FC6A-N16B3 / FC6A-N32B3

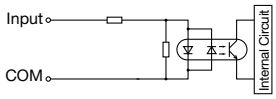

FC6A-M08BR☐ / FC6A-M24BR☐

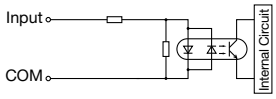

FC6A-N08A1☐

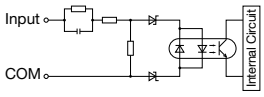

Output Internal Circuit

FC6A-T08K☐ FC6A-T16K☐ FC6A-T32K3

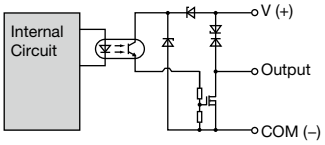

FC6A-T08P☐ FC6A-T16P☐ FC6A-T32P3

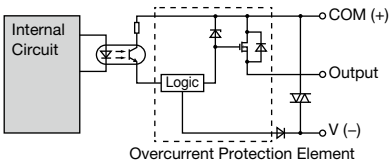

Note: Specify a terminal type code in place of ☐ in the Part No. (1: screw fastened type, 3: MIL connector type, 4: Push-in type)
Note: See page 4 for part numbers.

Analog I/O Modules

Analog Module

Specifications

Part No.	FC6A-J2C□	FC6A-J4A□	FC6A-J8A□	FC6A-L06A□ (*2)	FC6A-L03CN□ (*3)	FC6A-J4CN□	FC6A-J4CH□Y	FC6A-J8CU□	FC6A-K4A□ (*2)	FC6A-K2A□
Input Points	2	4	8	4	2	4	4	8	–	–
Input Signal Type	Voltage (0 to 10V) Voltage (–10 to +10V) Current (0 to 20mA) Current (4 to 20mA)				Voltage (0 to 10V) Voltage (–10 to +10V Current (0 to 20mA) Current (4 to 20mA) Thermocouple Resistance Thermometer		Thermocouple	Thermocouple Thermistor (NTC, PTC)	–	–
Output Points	–	–	–	2	1	–	–	–	4	2
Output Signal Style	–	–	–	Voltage (0 to 10V) Voltage (–10 to +10V) Current (0 to 20mA) Current (4 to 20mA)		–	–	–	Voltage (0 to 10V) Voltage (–10 to +10V) Current (0 to 20mA) Current (4 to 20mA)	
External Power Supply	Rated Power Voltage 12/24V DC, Allowable Voltage Range 10.2 to 28.8V DC28.8V (However, FC6A-L06A□ and K4A are DC24V, DC20.4 to 28.8V)									
External Current Draw (*1)	50mA (DC12V) 25mA (DC24V)	60mA (DC12V) 30mA (DC24V)	80mA (DC12V) 40mA (DC24V)	100mA (DC24V)	160mA (DC12V) 80mA (DC24V)	80mA (DC12V) 40mA (DC24V)	80mA (DC12V) 40mA (DC24V)	60mA (DC12V) 30mA (DC24V)	125mA (DC24V)	140mA (DC12V) 70mA (DC24V)
Internal Power Consumption (5V DC)	40mA max.	45mA max.	40mA max.	55mA max.	55mA max.	50mA max.	50mA max.	45mA max.	50mA max.	40 mA max.
Internal Power Consumption (at 24V DC while all I/Os are ON)	0.27W	0.30W	0.27W	0.37W	0.37W	0.34W	0.34W	0.30W	0.34W	0.27W
Connector Insertion/Removal Durability	100 times minimum									
Weight (approx.)	FC6A-J2C1: 115g FC6A-J2C4: 100g	FC6A-J4A1: 110g FC6A-J4A4: 100g	FC6A-J8A1: 110g FC6A-J8A4: 100g	FC6A-L06A1: 110g FC6A-L06A4: 100g	FC6A-L03CN1: 115g FC6A-L03CN4: 100g	FC6A-J4CN1: 110g FC6A-J4CN4: 100g	FC6A-J4CH1Y: 110g FC6A-J4CH4Y: 100g	FC6A-J8CU1: 110g FC6A-J8CU4: 100g	FC6A-K4A1: 115g FC6A-K4A4: 100g	FC6A-K2A1: 115g FC6A-K2A4: 100g

Note: Specify a terminal type code in place of □ in the Part No. (1: screw fastened type, 4: Push-in type)
*1) The external current draw is the value when all the analog inputs are used and the analog output value is at 100%.
*2) FC6A-K4A□ and -L06A□ cannot be used under the expanded ambient operating temperature (-25 to -10°C, +55 to +65°C).
*3) Do not use FC6A-L03CN□ analog voltage output in an environment exceeding ambient temperature 55°C.
Note: For operating conditions, see page 9.

Input Specifications

Part No.		FC6A-J2C□		FC6A-J8A□		FC6A-J4A□ / FC6A-L06A□	
Input Signal Type		Voltage Input	Current Input	Voltage Input	Current Input	Voltage Input	Current Input
Input Range		0 to 10V –10 to +10V	0 to 20mA 4 to 20mA	0 to 10V –10 to +10V	0 to 20mA 4 to 20mA	0 to 10V –10 to +10V	0 to 20mA 4 to 20mA
Input Impedance		1MΩ maximum	50Ω maximum	1MΩ maximum	50Ω maximum	1MΩ maximum	50Ω maximum
Input Detection Current		–	–	–	–	–	–
AD Conversion	Sampling Time	1ms		1ms or 10ms (selectable with WindLDR)		1ms or 10ms (selectable with WindLDR)	
	Sampling Repetition Time	Sampling time × valid input channels					
	Total Input System Transfer Time	Sampling time + sampling repetition time + 1 scan time					
	Type of Input	Single-ended input					
	Operating Mode	Self-scan					
	Conversion Method	∑ Δ type ADC					
Input Error	Maximum Error at 25°C	±0.1% of full scale		±0.2% of full scale		±0.2% of full scale	
	Cold Junction Compensation Error	–	–	–	–	–	–
	Temperature Coefficient	±0.006% of full scale/°C		±0.01% of full scale/°C		±0.01% of full scale/°C	
Data	Digital Resolution	65,536 increments (16 bits)		65,536 increments (16 bits) (*1)		4,096 increments (12 bits) *FC6A-J8A1: can be expanded to 16-bit input (selectable with WindLDR)	
	Input per Resolution	0 to 10V: 0.15mV –10 to +10V: 0.30mV	0 to 20mA: 0.30μA 4 to 20mA: 0.244μA	0 to 10V: 0.15mV –10 to +10V: 0.30mV	0 to 20mA: 0.30μA 4 to 20mA: 0.244μA	0 to 10V: 2.44mV –10 to +10V: 4.88mV	0 to 20mA: 4.88μA 4 to 20mA: 3.91μA
	Data Type in Application Program	Optional: –32,768 to 32,767 (selectable for each channel) (*2)					
	Monotonicity	Yes					
	Input Data Out of Range	Detectable (*3)					
Noise Resistance	Input Filter	Soft filter (0 to 10 s, selectable in increments of 0.1 s) (selectable with WindLDR)					
	Recommended Cable for Noise Immunity	Pair shielded cable					
	Crosstalk	1LSB maximum					
Isolation		Between input and power circuit: Transformer-isolated Between input and internal circuit: Optocoupler-isolated					
Effect of Improper Input Connection		No damage					
Maximum Permanent Allowed Overload (No Damage)		30V DC (*4)	160mA (*5)	30V DC	160mA (*5)	30V DC	160mA (*5)
Selection of Analog Input Signal Type		Selectable with WindLDR					
Calibration or Verification to Maintain Rated Accuracy		Not possible					

Note: Specify a terminal type code in place of □ in the Part No. (1: screw fastened type, 4: Push-in type)
*1) Binary data (16 bits) and optional range (16 bits) can be used with the following versions.
FC6A-J8A□: Version 200 or later WindLDR: Version 8.6.0 or later
If a FC6A-J8A□ that does not correspond to the above version numbers is set to binary data (16 bits) or optional range (16 bits), an error will occur and the module will operate as binary data (12 bits).
*2) The arbitrary setting is a function that uses the digital resolution data by scaling it to arbitrary data (that arbitrarily sets the lower limit value and the upper limit value). The range setting (-32,768 to 32,767) is specified with data registers.
*3) Input data out of range is reflected in the status of the analog I/O module.
*4) FC6A Ver. 200 and later: voltage input 13V DC, current input 40mA DC
*5) If current of more than 160mA is applied at 25ºC, a protect function works to protect the input circuit by reducing current. However, when a current is applied at a voltage of more than 30V DC, the circuit will be damaged.

Analog I/O Modules

Input Specifications

Part No.		FC6A-L03CN□ / FC6A-J4CN□				FC6A-J4CH□Y	FC6A-J8CU□		
Input Signal Type		Voltage Input	Current Input	Resistance Thermometer	Thermocouple	Thermocouple	Thermocouple	NTC Thermistor	PTC Thermistor
Input Range		0 to 10V DC –10 to +10V	0 to 20mA 4 to 20mA	Pt100, Pt1000 3-wire type (–200 to 850°C) Ni100, Ni1000 3-wire type (–60 to 180°C)	Type K (–200 to +1,300ºC) Type J (–200 to +1,000ºC) Type R (0 to 1,760ºC) Type S (0 to 1,760ºC) Type B (0 to 1,820ºC) Type E (–200 to +800ºC) Type T (–200 to +400ºC) Type N (–200 to +1,300ºC) Type C (0 to 2,315ºC)			–90 to +150°C	100 to 10,000Ω
Input Impedance		1 MΩ minimum	50Ω maximum	1 MΩ minimum	1 MΩ minimum	1 MΩ minimum	1 MΩ minimum	1 MΩ minimum	
Input Detection Current		—	—	0.1mA maximum	0.1mA maximum	0.1mA maximum	0.1mA maximum	0.1mA maximum	
AD Conversion	Sampling Time	10ms, 100ms (selectable using WindLDR)		104ms		30ms, 120ms (selectable using WindLDR)	104ms		
	Sampling Repetition Time	Sampling time × valid input channels							
	Total Input System Transfer Time	Sampling time + sampling repetition time + 1 scan time							
	Type of Input	Single-ended input				Differential input	Single-ended input		
	Operating Mode	Self-scan							
	Conversion Method	∑ Δ type ADC							
Input Error	Maximum Error at 25°C	±0.2% of full scale		FC6A-L03CN□: ±0.1% of full scale + cold junction compensation error FC6A-J4CN□: ±0.2% of full scale + cold junction compensation error (*3)		±0.2% of full scale + cold junction compensation error (*3)	±0.2% of full scale + cold junction compensation error (*3)	±0.2% of full scale	
	Cold Junction Compensation Error	—	—	—	±4°C maximum	±4°C maximum	±4°C maximum		
	Temperature Coefficient	FC6A-L03CN□:0.006%/ºC of full scale FC6A-J4CN□ :0.01%/ºC of full scale				0.01%/ºC of full scale	0.01%/ºC of full scale		
Data	Digital Resolution	65,536 increments (16 bits)		Pt100: approx. 10,500 increments (14 bits) Pt1,000: approx. 8,000 increments (13 bits) Ni100: approx. 2,400 increments (12 bits) Ni1,000: approx. 2,400 increments (12 bits)	Type K: approx. 15,000 increments (14 bits) Type J: approx. 12,000 increments (14 bits) Type R: approx. 17,600 increments (15 bits) Type S: approx. 17,600 increments (15 bits) Type B: approx. 18,200 increments (15 bits) Type E: approx. 10,000 increments (14 bits) Type T: approx. 6,000 increments (13 bits) Type N: approx. 15,000 increments (14 bits) Type C: approx. 23,150 increments (15 bits)			NTC: approx. 2,400 increments (12 bits) PTC: approx. 9,900 increments (14 bits)	
	Input Value of LSB	0 to 10V: 0.15mV –10 to +10V: 0.30mV	0 to 20mA: 0.30μA 4 to 20mA: 0.244μA	0.1ºC	0.1ºC	0.1ºC	0.1ºC	0.1ºC	1Ω
	Data Type in Application Program	Optional: selectable for each channel from –32,768 to 32,767 (*1)							
	Monotonicity	Yes							
	Input Data Out of Range	Detectable (*2)							
Noise Resistance	Input Filter	Soft filter (0 to 10 s, selectable in increments of 0.1 s) (selectable with WindLDR)							
	Recommended Cable for Noise Immunity	Pair shielded cable		Pair cable					
	Crosstalk	1 LSB maximum							
Isolation	Between input and power circuit	Transformer-isolated							
	Between input and internal circuit	Optocoupler-isolated							
	Between inputs	Not isolated				Optocoupler-isolated	Not isolated		
Effect of Improper Input Connection		No damage							
Maximum Permanent Allowed Overload (No Damage)		30V DC (*4)	160mA (*5)						
Selection of Input Signal Type and Input Range		Selectable with WindLDR							
Calibration or Verification to Maintain Rated Accuracy		Not possible							

Note: Specify a terminal type code in place of □ in the Part No. (1: screw fastened type, 4: Push-in type)

*1) The data processed in the analog I/O module can be linear-converted to a value between –32,768 and 32,767. The optional range designation, and analog I/O data minimum and maximum values can be selected using data registers allocated to analog I/O modules.

*2) When an error is detected, a corresponding error code is stored to a data register allocated to analog I/O operating status.

*3) R, S: ±6 (0 to 200ºC)
B: no compensation
K, J, E, T, N: ±0.4% of full scale (0ºC maximum)

*4) FC6A Ver. 200 and later: voltage input 13V DC, current input 40mA DC

*5) If current of more than 160mA is applied at 25ºC, a protect function works to protect the input circuit by reducing current. However, when a current is applied at a voltage of more than 30V DC, the circuit will be damaged.

Analog I/O Modules / PID Modules

Analog Modules

Output Specifications

Part No.			FC6A-K2A□ / FC6A-K4A□	FC6A-L06A□	FC6A-L03CN□
Output Signal Style/Output Range		Voltage	0 to 10V DC –10 to +10VDC		
		Current	0 to 20mA 4 to 20mA		
Load	Impedance		Voltage output: 1 kΩ minimum Current output: 300Ω maximum		
	Load Type		Resistive load		
DA Conversion	DA Conversion Time		1ms		
	Output Update Interval		1ms		
	Total Output System Transfer Time		DA Conversion Time +Output Update Interval + 1 scan time		
Output Error	Maximum Error at 25°C		±0.2% of full scale	±0.1% of full scale	±0.2% of full scale
	Temperature Coefficient		±0.01%/ºC of full scale	±0.006%/ºC of full scale	±0.01%/ºC of full scale
	Repeatability after Stabilization Time		±0.4% of full scale		
	Output Voltage Drop		No damage		
	Non-lineality		±0.2% of full scale	±0.01%/ºC of full scale	±0.2% of full scale
	Output Ripple		20mV maximum		
	Overshoot		0%		
	Total Error		±1% of full scale		
Data	Digital Resolution		4,096 increments (12 bits)		
	Output Value of LSB	Voltage	0 to 10V DC: 2.44mV –10 to +10V DC: 4.88mV		
		Current	0 to 20mA: 4.88μA 4 to 20mA: 3.91μA		
	Data Type in Application Program		Optional: –32,768 to 32,767 (selected for each channel)		
	Monotonicity		Yes		
	Current Loop Open		Undetectable		
Noise Resistance	Recommended Cable for Noise Immunity		Pair shielded cable		
	Crosstalk		1LSB		
Isolation	Between output and power circuit		Transformer-isolated		
	Between output and internal circuit		Optocoupler-isolated		
Effect of Improper Output Connection			No damage		
Selection of Analog Output Signal Type			Selectable with WindLDR		
Calibration or Verification to Maintain Rated Accuracy			Not possible		

Note: Specify a terminal type code in place of □ in the Part No. (1: screw fastened type, 4: Push-in type)
Note: For operating conditions, see page 9.

Specifications (PID Module)

Input Range

Part No.	FC6A–F2MR□ / FC6A–F2M□		
Input	Input Range (Digital Resolution)		Input Value per Step
K	–200 to 1,370ºC	–328 to 2,498°F	1ºC (°F)
	–200.0 to 400.0ºC	–328.0 to 752.0°F	0.1ºC (°F)
J	–200 to 1,000ºC	–328 to 1,832°F	1ºC (°F)
R	0 to 1,760ºC	32 to 3,200°F	1ºC (°F)
S	0 to 1,760ºC	32 to 3,200°F	1ºC (°F)
B	0 to 1,820ºC	32 to 3,308°F	1ºC (°F)
E	–200 to 800ºC	–328 to 1,472°F	1ºC (°F)
T	–200.0 to 400.0ºC	–328.0 to 752.0°F	0.1ºC (°F)
N	–200 to 1,300ºC	–328 to 2,372°F	1ºC (°F)
PL-II	0 to 1,390ºC	32 to 2,534°F	1ºC (°F)
C (W/Re5-26)	0 to 2,315ºC	32 to 4,199°F	1ºC (°F)
Pt100	–200 to 850ºC	–328 to 1,562°F	1ºC (°F)
	–200.0 to 850.0ºC	–328.0 to 1,562.0°F	0.1ºC (°F)
JPt100	–200 to 500ºC	–328 to 932°F	1ºC (°F)
	–200.0 to 500.0ºC	–328.0 to 932.0°F	0.1ºC (°F)
DC 4 to 20mA	–2,000 to 10,000 (12,000 increments) (*1)		1.333μA
DC 0 to 20mA	–2,000 to 10,000 (12,000 increments) (*1)		1.666μA
DC 0 to 1V	–2,000 to 10,000 (12,000 increments) (*1)		0.083mA
DC 0 to 5V	–2,000 to 10,000 (12,000 increments) (*1)		0.416mA
DC 1 to 5V	–2,000 to 10,000 (12,000 increments) (*1)		0.333mA
DC 0 to 10V	–2,000 to 10,000 (12,000 increments) (*1)		0.833mA

Note: Specify a terminal type code in place of □ in the Part No. (1: screw fastened type, 4: Push-in type)
*1) Linear-conversion is possible.

PID Modules

Ratings

Part No.		FC6A-F2MR□	FC6A-F2M□
Power Voltage		24V DC (external power), 5V DC (internal power)	
Allowable Voltage Range		20.4 to 28.8V DC	
Maximum Power Consumption		3.6W	
Internal Power Consumption		65mA (5V DC)	
Control Mode	Independent PID Control	Possible	
	Heating/Cooling Control	Possible (overwrapping deadband settings available) (*1)	
	Difference Input Temperature Control	Possible (*1)	
	Cascade Control	Possible (*1)	
Input Points		2ch	
Input Type Input Range	Thermocouple	K, J, R, S, B, E, T, N, PL-II, C (W/Re5-26) External resistance: 100Ω maximum	
	Resistance Thermometer	Pt100, JPt100, 3-wire type	
	Current Input	0 to 20 mA DC, 4 to 20 mA DC Input impedance: 50Ω	
	Voltage Input	0 to 1V DC Input impedance: 1MΩ minimum	
		0 to 5V DC, 1 to 5V DC, 0 to 10V DC Input impedance: 100kΩ minimum	
AD Conversion	Sampling Time	100 ms	
	Sampling Repetition Time	100 ms	
	Total Input System Transfer Time	Sampling time + sampling repetition time + 1 scan time	
	Type of Input	Differential input	
	Conversion Method	∑ Δ type ADC	
Maximum Error at 25°C	Thermocouple Input	±0.2% of full scale or ±2°C (4°F), whichever is greater However, R, S inputs: 0 to 200°C (0 to 400°F): ±6°C (12°F) B input: 0 to 300°C (0 to 600°F) Accuracy is not guaranteed. K, J, E, T, N inputs: Less than 0°C (32°F): ±0.4% of full scale	
	Resistance Thermometer Input	±0.1% of full scale or ±1°C (2°F), whichever is greater	
	Voltage/Current Inputs	±0.2% of full scale	
Cold Junction Temperature Compensation Accuracy		±1°C at 0 to 55°C	
Temperature Coefficient		±0.005%/°C of full scale	
Noise Resistance	Input Filter	Yes	
	Recommended Cable for Noise Immunity	Pair shielded cable (current/voltage)/Pair cable (temperature input)	
	Cross Talk	None	
Isolation	Between input and power circuit	Transformer-isolated	
	Between input and internal circuit	Optocoupler-isolated	
	Between inputs	Optocoupler-isolated	
Output Points		2ch	
Output		Relay output: 1NO Rated load: 5A 250V AC/30V DC (resistive load) 3A 250V AC (inductive load cos ø=0.4) 3A 30V DC (inductive load VR=7ms) Minimum open/closed load: 10 mA 5V DC (reference value) Electrical life: 100,000 cycles (at the maximum rating of resistive load)	Non-contact voltage output (for SSR drive) 12V DC±15% Maximum 40 mA (short circuit protected)
			Analog current output 4 to 20 mA DC Load resistance: 550Ω maximum Analog output digital resolution: 1,000 (10 bits) LSB input value: 0.016 mA
Noise Resistance	Recommended Cable for Noise Immunity	—	Pair shielded cable
	Cross Talk	—	None
Isolation	Between output and power circuit	Transformer-isolated	
	Between input and internal circuit	Optocoupler-isolated	
Weight (approx.)		FC6A-F2MR1 / FC6A-F2M1: 140g FC6A-F2MR4 / FC6A-F2M4: 130g	

Note: Specify a terminal type code in place of □ in the Part No. (1: screw fastened type, 4: Push-in type)
*1) Dual channel input is required for one loop control.
*2) FC6A-F2MR□ and -F2M□ cannot be used under the expanded ambient operating temperature (-25 to -10°C, +55 to +65°C).
Note: For operating conditions, see page 9.

Analog I/O Modules / PID Modules

Input Circuit

FC6A-J2C□ / FC6A-J4A□
FC6A-J8A□ / FC6A-L06A□

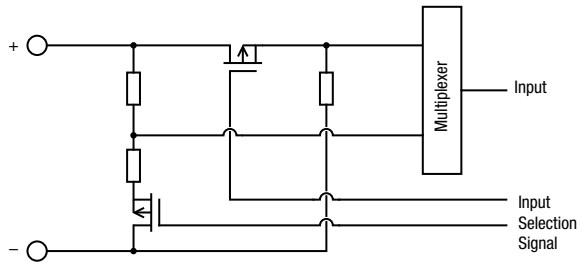

FC6A-J8CU□

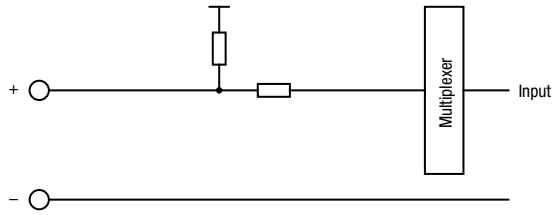

FC6A-J4CN□ / FC6A-L03CN□

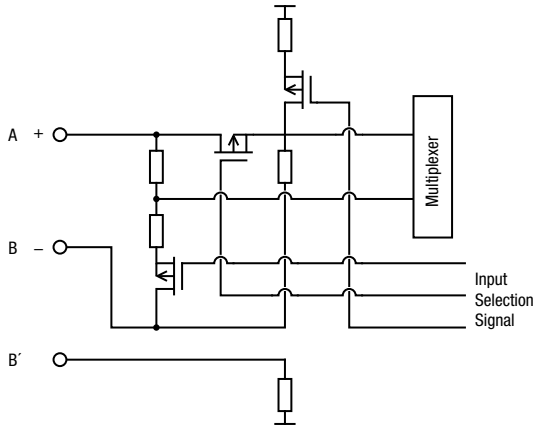

FC6A-F2M□ / FC6A-F2MR□

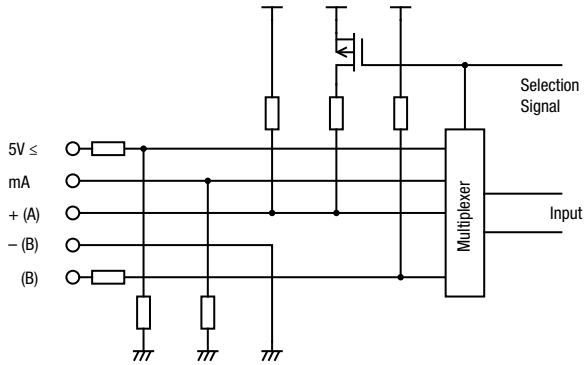

FC6A-J4CH□Y

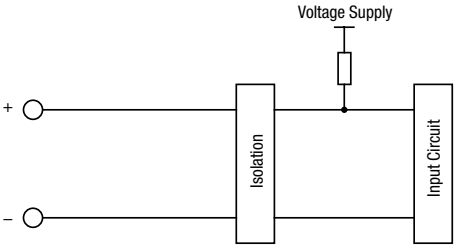

Output Circuit

FC6A-L03CN□ / FC6A-L06A□
FC6A-K2A□ / FC6A-K4A□

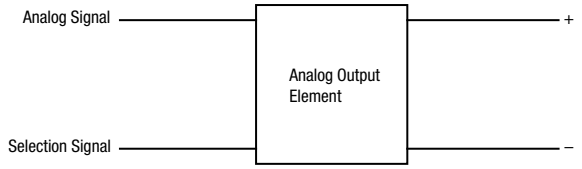

FC6A-F2M□
(Non-contact voltage output for SSR drive)

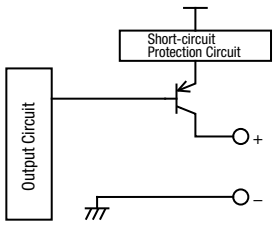

FC6A-F2M□
(current output)

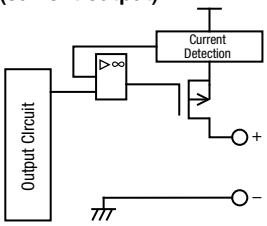

FC6A-F2MR□

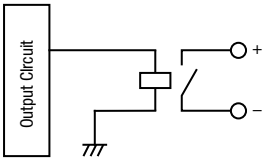

Note: Specify a terminal type code in place of □ in the Part No.
(1: screw fastened type, 4: Push-in type)
Note: See page 6 for part numbers.

HMI Module / Communication Module

HMI Module Specifications

General

Part No.	FC6A-PH1
Power Consumption Inside Module (without connection cartridge)	100mA (5V) 15mA (24V)
Cartridge (option)	One analog cartridge can be added Any cartridge can be added when using on Plus CPU module
Weight (approx.)	170g

Operation

Part No.	FC6A-PH1
Operation Method	Rubber Switch
Operating Force	2.0N minimum
Mechanical Life	10,000 operations
Multiple Operation	Possible

Display

Part No.		FC6A-PH1
Display		STN Monochrome LCD
Color/Shade		Monochrome
Effective Display Area		47.98W × 8.22H mm
Display Resolution		192W × 64H pixels
View Angle		Right and left 30°, up 20°, down 40°
Contrast adjustment		Not possible
Backlight		LED (green)
Brightness		45 cd/m^2
Brightness Adjustment		Not possible
Backlight Control		ON/OFF
Backlight Replacement		Not possible
Display Character Size	1/2 size	8 × 16 pixels (JIS 8-bit code, Western European language ISO 8859-1, Cyrillic ANSI1251)
	Full size	16 × 16 pixels (Japanese JIS first level characters, simplified Chinese)
Quantity of Characters	1/2 size	24 characters × 4 lines
	Full size	12 characters × 4 lines
Character Attribute		Blink, reverse

HMI Ethernet Port

Part No.		FC6A-PH1
Communication		Complies with IEEE802.3
Transmission speed		10BASE-T, 100BASE-TX
Protocol		Datalink layer: IP/ARP Network layer: TCP/UDP, ICMP Application layer: DHCP, DNS, HTTP, SMTP
Connector		RJ45
Cable		CAT 5. STP
Maximum Cable Length		100m
Isolation from Internal Circuit		Pulse transformer isolation
Major Functions	Remote Maintenance	Uploading, downloading and monitoring user programs using WindLDR via Ethernet Number of connections: 8
	Web Server HMI Module System Software V.I.20 and later	5MB max. total size of system web page and user web page (system web page: about 500KB) Number of connections: 8 maximum Authentic method: digest authentication
	Send E-mail	Sends preregistered e-mails. Up to 255 types of e-mails can be sent. Authentic method: SMTP-Auth (login), SMTP-Auth (CRAM-MD5), SMTPs Encoding method: BASE64 encode selectable
	E-mail Size	The maximum size of texts for To or Cc is 512 bytes. (*1) E-mail subject: 255 bytes maximum E-mail body: 4,096 bytes maximum Attached CSV file: 4,096 bytes maximum (includes spaces, separator characters, and newlines)

*1) Comma (,) is inserted as a separating character between e-mail addresses.
*2) Operating temperature for FC6A-PH1 is +0 to +55°C.
Cannot be used under the expanded ambient operating temperature (-25 to -10°C, +55 to +65°C).

Communication Module Specifications

General

Part No.		FC6A-SIF52□
No. of Ports		2
No. of Connectable CPU		15 max. (when using an unibody expansion interface modules)
Communication Type		RS232C or RS485 selectable (per port)
Maximum Baud Rate		115,200 bps
No. of Slaves		RS485: 31 (per port)
Maintenance Communication		Possible
Modbus Communication		Possible
Datalink		Possible
Isolation		Between ports: transformer-isolated Between input circuits and communication: transformer- and optcoupler-isolated
Maximum Cable Length		RS232C: 15m RS485: 1,200m
Recommended Cable		RS232C: 0.2mm2 shielded 6-core cable RS485: 0.3mm2 shielded twisted pair cable (2P)
Power Consumption Inside Module (without connection cartridge)		24V DC: 35mA, 5V DC: 35mA
Connector	Insertion/Removal Durability	100 times
Weight		FC6A-SIF52: 110g FC6A-SIF524: 100g

Note: Specify a terminal type code in place of □ in the Part No. (blank: screw fastened type, 4: Push-in type)
Note: For operating conditions, see page 9.

Expansion Interface Modules / Cartridge Base Modules

Specifications

Expansion Interface Modules

Unibody Type

Part No.		FC6A-EXM2□
I/O Expansion	Between CPU module and expansion interface module: Connectable I/O modules	7 maximum (224 I/Os maximum)
	Beyond the expansion interface module: Connectable I/O modules	8 maximum (256 I/Os maximum)
Rated Power Voltage		24V DC
Allowable Voltage Range		20.4 to 28.8V DC
Power Consumption	Internal power (supplied from CPU module)	20 mA (5V DC), 0 mA (24V DC)
	External power	With I/O modules (*1) 0.75A (26.4V DC)
Maximum Power Consumption (*1) (External Power)		0.5W (24V DC)
Allowable Momentary Power Interruption		10ms minimum (24V DC)
Isolation from Internal Circuit		Not isolated
No. of Connectable CPU		Plus: 11, All-in-one: 1
Connector	Insertion/Removal Durability	100 times
Weight (approx.)		150g

Note: Specify a terminal type code in place of □ in the Part No. (blank: screw fastened type, 4: Push-in type)
*1) Power consumption by the expansion interface module and eight I/O modules.
Note: For operating conditions, see page 9.

Separate Master Type

Part No.	FC6A-EXM1M
No. of Connectable CPU	Plus: 1
No. of Connectable Slaves	10
Connector	RJ45
Cable	CAT. 5 or higher STP
Maximum Cable Length	100m
Isolation from Internal Circuit	Pulse transformer isolation
Power Consumption inside Module	DC5V: 75mA
Weight (approx.)	80g

Note: When using an expansion interface module (separate master type), the no. of connectable expansion modules to the basic expansion side of Plus CPU module is 5 maximum.
(13 max. modules when using an expansion interface (unibody type)
Note: For operating conditions, see page 9.

Separate Slave Type

Part No.		FC6A-EXM1S□
I/O Expansion	Between CPU module and expansion interface module: Connectable I/O modules	7 maximum (224 I/Os maximum)
	Beyond the expansion interface module: Connectable I/O modules	8 maximum (256 I/Os maximum)
Rated Power Voltage		24V DC
Allowable Voltage Range		20.4 to 28.8V DC
Maximum Power Consumption (*1) (External Power)		24.5W
Allowable Momentary Power Interruption		10ms minimum (24V DC)
Connectable Expansion Modules		Digital I/O Module Analog I/O Module
Isolation from Internal Circuit	Between internal circuits and power supply	Not isolated
	Between input circuits and communication	Pulse transformer isolation
Connector	Insertion/Removal Durability	100 times
Communication	Connector	RJ45
	Cable	CAT. 5 or higher STP
	Maximum Cable Length	100m
Weight (approx.)		165g

Note: Specify a terminal type code in place of □ in the Part No. (blank: screw fastened type, 4: Push-in type)
*1) Power consumption by the expansion interface module and seven I/O modules.
Note: For operating conditions, see page 9.

Cartridge Base Module

Part No.	FC6A-HPH1
No. of Connectable Cartridges	2
Connectable Cartridges	Communication cartridge, digital I/O cartridge, analog I/O cartridge
No. of Connectable CPU	Plus: 1
Weight (approx.)	95g

Note: Cannot be used under the expanded ambient operating temperature.

Cartridges

Communication Cartridge Specifications

Note: Cannot be used under expanded ambient operating temperature.

Serial Communication

Part No.		FC6A-PC1	FC6A-PC3
Standards		EIA RS232C	EIA RS485
Maximum Baud Rate		115,200 bps	
Maintenance Communication		Possible	Possible
User Communication		Possible	Possible
Data Link Communication		Possible	Possible
Modbus RTU		Possible	Possible
Half-duplex Communication		—	Possible
Maximum Cable Length		5m	200m
Quantity of Slave Stations		—	31
Isolation between Internal Circuit and Communication Port		Not isolated	
RS485 Cable	Recommended Cable	0.2mm² shielded 3-core cable	0.3mm² shielded twisted pair cable (2P)
	Conductor Resistance	—	85 Ω/km maximum
	Shield Resistance		20 Ω/km maximum

Bluetooth Communication

Part No.	FC6A-PC4
Bluetooth Standard	Bluetooth ver 2.1 + EDR
Profile	SPP (Serial Port Profile) iAP (iPod Accessory Protocol)
Frequency Range	2,402 MHz to 2,480 MHz
Wireless Transmission Distance *1	10m (Class 2)
Multi-point Function	8 units
Communication Protocol	Maintenance communication protocol User communication protocol
Bluetooth Wireless Approved Regions *2	Japan, People's Republic of China, USA, Canada, Australia, New Zealand, Europe

*1) Connection effective range is affected by obstacles (human, metal, wall) and wave signal condition. Make sure to confirm the connection status before actual operation.
*2) Depending on countries or regions, evaluation on the device equipped with FC6A may be necessary.
Note: Communication performance (required time) in maintenance communication is as follows.
User program upload equivalent to 10,000 steps: 40 seconds approx.
User program download equivalent to 10,000 steps: 50 seconds approx.
User program upload equivalent to 20,000 steps: 1 minute 20 seconds approx.
User program download equivalent to 20,000 steps: 1 minute 40 seconds approx.
100KV CSV file retrieval: 30 seconds approx.
200KV CSV file retrieval: 60 seconds approx.

Digital I/O Cartridge Specifications

Input Cartridge

Part No.		FC6A-PN4
Input Points		4 (4/1 common)
Rated Input Voltage		12/24V DC sink/source input signal
Input Voltage Range		0 to 28.8V DC
Rated Input Current		2.5 mA/point (12V DC) 5mA/point (24V DC)
Input Impedance		4.4 kΩ
OFF Voltage		5V maximum
ON Voltage		8.5V minimum
OFF Current		0.9 mA maximum
ON Current		1.7 mA minimum (at 8.5V DC)
Input Delay Time (24V DC)	Turn ON	0.5ms
	Turn OFF	0.5ms
Isolation		Between input terminals: Not isolated Internal circuit: Optocoupler-isolated
External Load for I/O Interconnection		Not needed
Signal Determination Method		Static
Effect of Improper Input Connection		Both sink and source input signals can be connected. If any input exceeding the rated value is applied, permanent damage may be caused.
Internal Current Draw	All Inputs ON	35mA (3.3V DC) 0mA (24V DC)
	All Inputs OFF	30mA (3.3V DC) 0mA (24V DC)
Internal Power Consumption (at 24V DC while all inputs ON)		0.10W
Cable Length		3m in compliance with electromagnetic immunity
Weight (approx.)		15g

Output Cartridge

Part No.		FC6A-PTK4	FC6A-PTS4
Output Points		4 sink (4/1 common)	4 source (4/1 common)
Rated Input Voltage		12/24V DC	
Input Voltage Range		10.2 to 28.8V DC	
Maximum Load Current	Per Point	0.1A	
	Per Common	0.4A	
Output Delay	Turn ON	450μs maximum	
	Turn OFF	450μs maximum	
Isolation		Between input terminals: Not isolated Internal circuit: Optocoupler-isolated	
Voltage Drop (ON Voltage)		1V max (voltage between COM and output terminal when output is on.)	
Inrush Current		1A	
Leakage Current		0.1mA maximum	
Clamping Voltage		Approx. 50V	
Maximum Lamp Load		2.4W	
Inductive Load		L/R=10ms (28.8V DC, 1Hz)	
External Current Draw		100mA maximum, 24V DC (power voltage at the +V terminal terminal at source)	100mA maximum, 24V DC (power voltage at the -V terminal at source)
Overcurrent Protection		No	
Internal Current Draw	All Outputs ON	35mA (3.3V DC) 0mA (24V DC)	
	All Outputs OFF	30mA (3.3V DC) 0mA (24V DC)	
Internal Power Consumption (at 24V DC while all outputs ON)		0.10W	
Weight (approx.)		15g	

Analog I/O Cartridge

General Specifications

Part No.	FC6A-PJ2A	FC6A-PJ2CP	FC6A-PK2AV	FC6A-PK2AW
Type	Voltage/Current Input	Temperature Input	Voltage Output	Current Output
No. of Points	2	2	2	2
Rated Voltage	5.0V, 3.3V (supplied from the CPU module)			
Power Consumption	5.0V: — 3.3V: 30mA		5.0V: 70mA 3.3V: 30mA	5.0V: 185mA 3.3V: 30mA
Weight (approx.)	15g			

Cartridges

Analog I/O Cartridge

Function Specifications

Part No.		FC6A-PJ2A	FC6A-PJ2CP	FC6A-PK2AV	FC6A-PK2AW
Input Points		2	2	—	—
Types of Inputs Input Range	Voltage Input	0-10V	—	—	—
	Current Input	0-20mA, 4-20mA	—	—	—
	Thermocouple	—	K, J, R, S, B, E, T, N, C	—	—
	Resistance Thermometer	—	Pt100, Pt1000, NI100, NI1000 3-wire type	—	—
Input Impedance	Voltage Input	1MΩ minimum	—	—	—
	Current Input	250Ω maximum	—	—	—
	Thermocouple	—	1MΩ minimum	—	—
	Resistance Thermometer	—	1MΩ minimum	—	—
Allowable Conductor Resistance (per wire)	Resistance Thermometer	N/A	10Ω maximum	—	—
Type of Input		Single-ended input		—	—
Sampling Time		10ms	250ms	—	—
Sampling Repetition Time		20ms	500ms	—	—
Total Input System Transfer Time		Sampling time + sampling repetition time + 1 scan time		—	—
Operation Mode		Self-scan		—	—
Conversion Method		SAR		—	—
Input Error	Maximum Error at 25ºC	±0.1% of full scale	±0.1%/ºC of full scale Cold junction compensation error: 4.0ºC maximum. However, R, S inputs: ±6ºC (0 to 200ºC) B: 0 to 300°C. Accuracy is not guaranteed. K, J, E, T, N inputs: less than ±0.4% of full scale (0ºC)	—	—
	Temperature Coefficient	±0.02%/ºC of full scale	±0.02%/ºC of full scale	—	—
Output Points		—	—	2	2
Types of Outputs	Voltage Output	—	—	0-10V	—
	Current Output	—	—	—	4-20mA
Types of Output Load	Impedance	—	—	2kΩ minimum	500Ω minimum
	Load Type	—	—	Resistive load	Resistive load
DA Conversion Time		—	—	40ms maximum	20ms maximum
Output Update Interval		—	—	20ms	20ms
Total Output Delay		—	—	DA conversion time + output update time + 1 scan time	
Output Error	Maximum Error at 25ºC	—	—	±0.3% of full scale	±0.3% of full scale
	Temperature Coefficient	—	—	±0.02%/ºC of full scale	±0.02%/ºC of full scale
	Output Ripple	—	—	30mV maximum	30mV maximum
	Overshoot	—	—	0%	0%
Data	Digital Resolution	4,096 increments (12 bits)	Thermocouple input K: approx.15,000 (14 bits) J: approx. 12,000 (14 bits) R: approx. 17,600 (15 bits) S: approx. 17,600 (15 bits) B: approx. 18,200 (15 bits) E: approx. 10,000 (14 bits) T: approx. 6,000 (13 bits) N: approx. 15,000 (14 bits) C: approx. 23,150 (15 bits) Resistance thermometer input Pt100: approx. 10,500 (14 bits) Pt1000: approx. 8,000 (13 bits) NI100: approx. 2,400 (12 bits) NI1000: approx. 2,400 (12 bits)	4,096 increments (12 bits)	4,096 increments (12 bits)
	Output Value of LSB	2.44 mV (0-10V) 4.88 µA (0-20mA) 3.91 µA (4-20mA)	0.1ºC or 0.18°F (thermocouple input) 0.1ºC or 0.18°F (resistor thermometer input)	2.44 mV (0-10V)	3.91 µA (4-20mA)
	Data Type in Application Program	–32,768 to 32,773 (selectable for each channel) (*2)	–32,768 to 32,773 (selectable for each channel) (*2)	0 to 4,095 (0-10V)	0 to 4,095 (4-20mA)
	Monotonicity	Yes	Yes	Yes	Yes
	Current Loop Open	—	—	—	Not detectable
	Input Data Out of Range	Detectable (*1)	Detectable (*1)	—	—
Noise Resistance	Recommended Cable	Pair shielded cable	Pair cable	Pair shielded cable	Pair shielded cable
	Crosstalk	1LSB maximum	1LSB maximum	1LSB	1LSB
Others	Selection of Output Signal Type	—	—	Voltage output only	Current output only
	Calibration to Maintain Rated Accuracy	Not possible			
	Effect of Improper Input Connection	No damage	No damage	—	—
	Effect of Improper Output Connection	—	—	No damage	No damage

*1) When an error is detected, a corresponding error code is stored to a data register allocated to analog I/O operating status.
*2) The data processed in the analog I/O module can be linear-converted to a value between -32,768 and 32,767. The optional range designation, and analog I/O data minimum and maximum values can be selected using data registers allocated to analog I/O modules.

Lineup
Plus
All-in-One
Modules
Cartridges
Dimensions
Mounting Hole Layout
Instructions

Cartridges

Digital I/O Cartridge Internal Circuit

FC6A-PN4

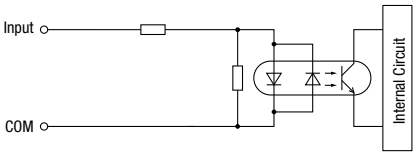

FC6A-PTK4

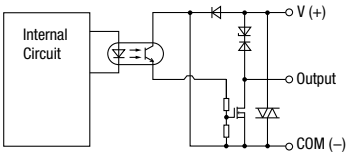

FC6A-PTS4

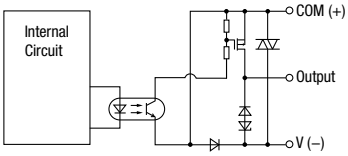

Dimensions

Plus CPU Modules

16 I/Os (8/8)

FC6A-D16R□CEE
FC6A-D16K□CEE
FC6A-D16P□CEE

*1) [ ] indicates a dimension for Push-in type.
*2) Push-in type does not have power supply terminal covers.

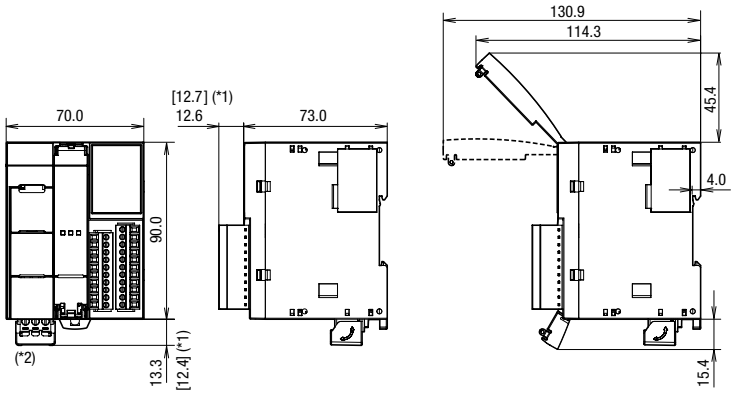

32 I/Os (16/16)

FC6A-D32K□CEE
FC6A-D32P□CEE

*1) [ ] indicates a dimension for Push-in type.
*2) Push-in type does not have power supply terminal covers.

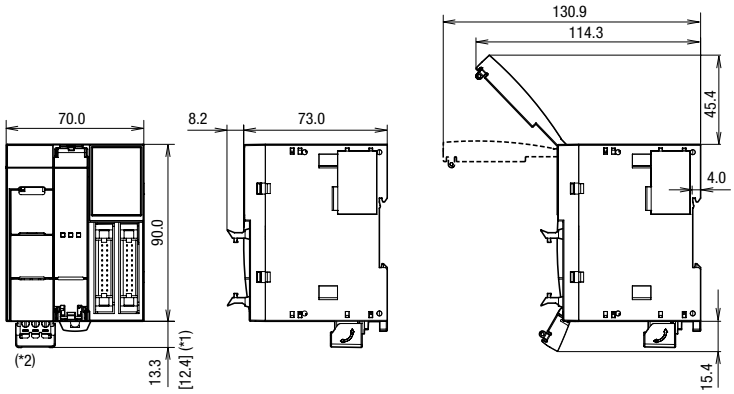

All dimensions in mm.

Note: Specify a terminal type code in place of □ in the Part No. (1: screw fastened type, 3: MIL connector type, 4: Push-in type)

Lineup
Plus
All-in-One
Modules
Cartridges
Dimensions
Mounting Hole Layout
Instructions

Dimensions

All-in-One CPU Modules

16 I/Os (8/8)

FC6A-C16R□AE
FC6A-C16R□CE
FC6A-C16R□DE
FC6A-C16P□CE
FC6A-C16P□DE
FC6A-C16K□CE
FC6A-C16K□DE

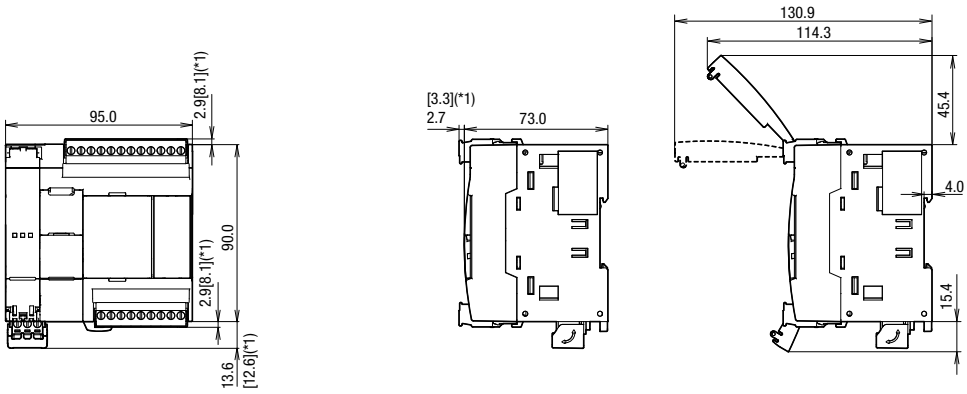

24 I/Os (14/10)

FC6A-C24R□AE
FC6A-C24R□CE
FC6A-C24P□CE
FC6A-C24K□CE

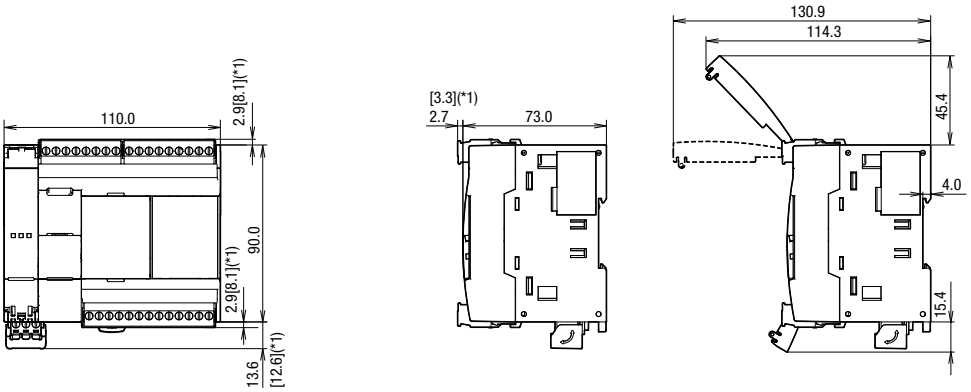

40 I/Os (24/16)

FC6A-C40R□AE
FC6A-C40R□CE
FC6A-C40P□CE
FC6A-C40K□CE
FC6A-C40R□DE
FC6A-C40P□DE
FC6A-C40K□DE

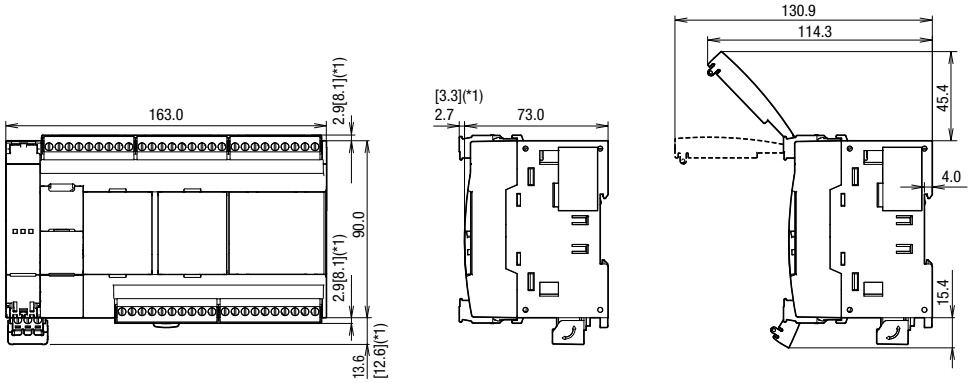

CAN J1939 All-in-One CPU Modules

40 I/Os (24/16)

FC6A-C40R□AEJ
FC6A-C40R□CEJ
FC6A-C40P□CEJ
FC6A-C40K□CEJ
FC6A-C40R□DEJ
FC6A-C40P□DEJ
FC6A-C40K□DEJ

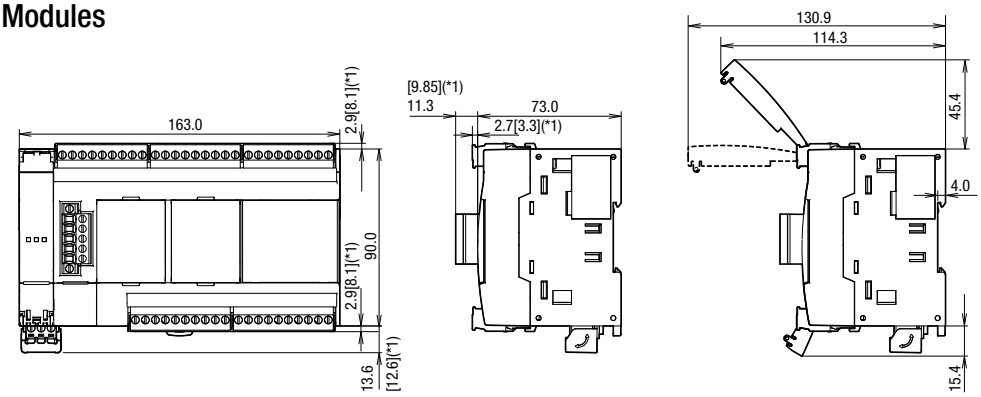

Note: Specify a terminal type code in place of □ in the Part No. (1: screw fastened type, 4: Push-in type)
*1) [ ] indicates a dimension for Push-in type.
*2) Push-in type does not have power supply terminal covers.

All dimensions in mm.

Dimensions

HMI Module

FC6A-PH1

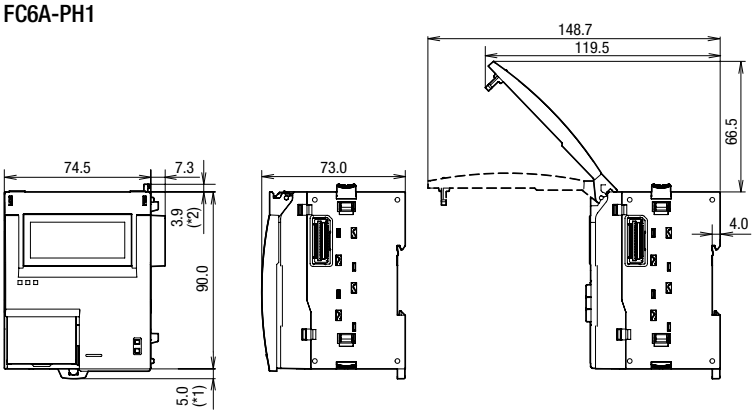

Expansion Interface Modules

Unibody Type

FC6A-EXM2□

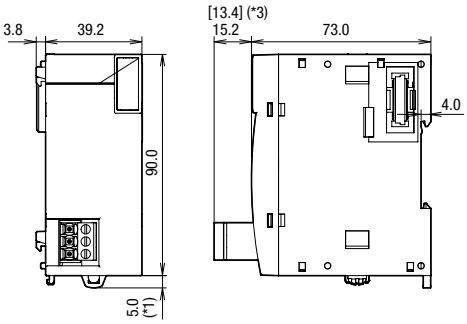

Separate Master Type

FC6A-EXM1M

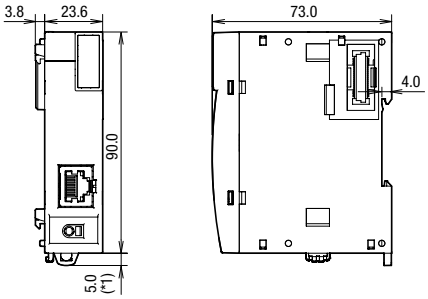

Separate Slave Type

FC6A-EXM1S□

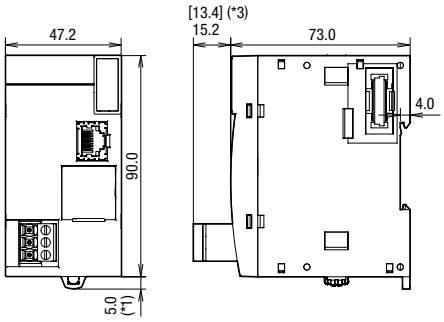

Cartridge Base Module

FC6A-HPH1

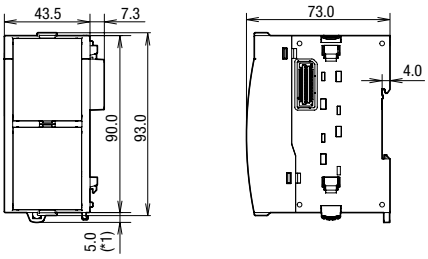

Note: Specify a terminal type code in place of □ in the Part No. (1: screw fastened type, 4: Push-in type)
*1) 9.3 mm when the clamp is pulled out.
*2) 0 mm when the eject button is locked.
*3) [ ] indicates a dimension for Push-in type.

All dimensions in mm.

Lineup
Plus
All-in-One
Modules
Cartridges
Dimensions
Mounting Hole Layout
Instructions

Dimensions

Expansion Modules

FC6A-N08B□ / FC6A-N08A1□ / FC6A-R08□
FC6A-T08K□ / FC6A-T08P□ / FC6A-M08BR□
FC6A-J2C□ / FC6A-K2A□ / FC6A-K4A□
FC6A-L03CN□

FC6A-N16B□ / FC6A-R16□ / FC6A-T16K□
FC6A-T16P□ / FC6A-J4A□ / FC6A-J8A□
FC6A-J4CN□ / FC6A-J4CH□Y / FC6A-J8CU□
FC6A-L06A□ / FC6A-SIF52□

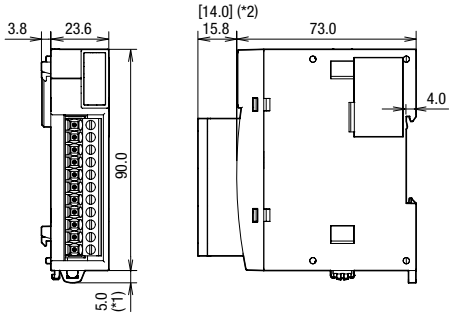

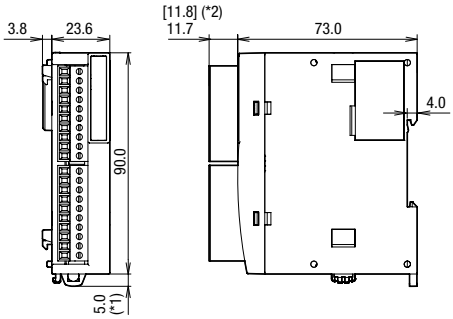

FC6A-N16B3 / FC6A-T16K3
FC6A-T16P3

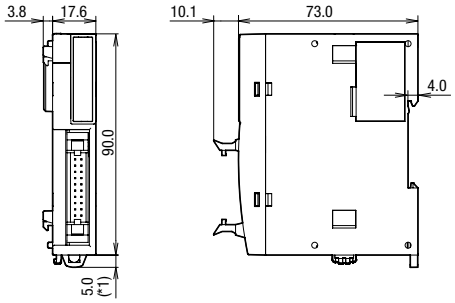

FC6A-N32B3 / FC6A-T32K3
FC6A-T32P3

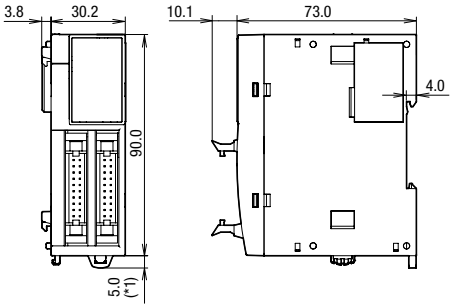

FC6A-M24BR□
FC6A-F2M□
FC6A-F2MR□

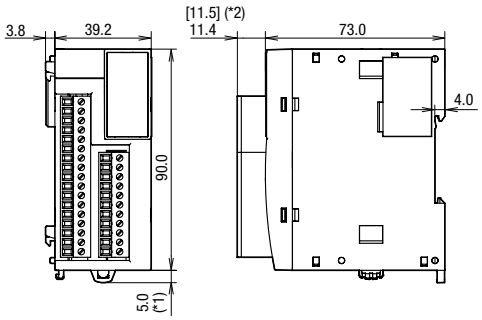

Cartridges

FC6A-PC1 / FC6A-PC3 / FC6A-PJ2A
FC6A-PK2AV / FC6A-PK2AW / FC6A-PJ2CP
FC6A-PN4 / FC6A-PTK4 / FC6A-PTS4

FC6A-PC4

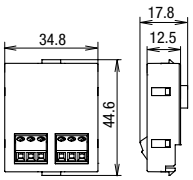

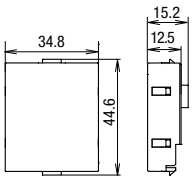

Note: Specify a terminal type code in place of □ in the Part No.
(blank: screw fastened type, 3: MIL connector type, 4: Push-in type)
*1) 9.3 mm when the clamp is pulled out.
*2) [ ] indicates a dimension for Push-in type.
Note: See page 5 to 7 for part numbers.

All dimensions in mm.

Lineup
Plus
All-in-One
Modules
Cartridges
Dimensions
Mounting Hole Layout
Instructions

Mounting Hole Layout

All-in-One / CAN J1939 All-in-One CPU Modules

Install FC6A directly to a flat panel using M4 pan head screws.

FC6A-C16R□AE
FC6A-C16R□CE
FC6A-C16R□DE
FC6A-C16K□CE
FC6A-C16K□DE
FC6A-C16P□CE
FC6A-C16P□DE

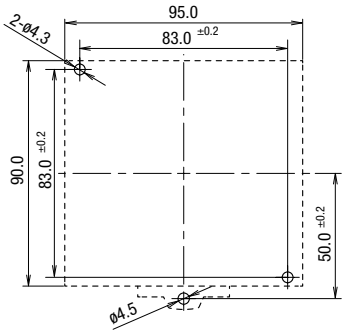

FC6A-C24R□AE
FC6A-C24R□CE
FC6A-C24K□CE
FC6A-C24P□CE

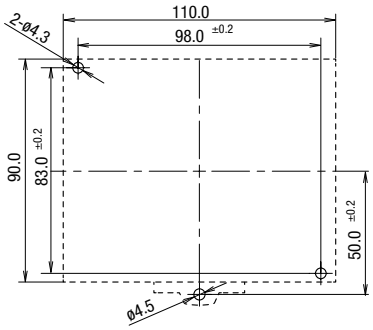

FC6A-C40R□AE / FC6A-C40R□CE / FC6A-C40K□CE
FC6A-C40P□CE / FC6A-C40R□DE / FC6A-C40K□DE
FC6A-C40P□DE / FC6A-C40R□AEJ / FC6A-C40R□CEJ
FC6A-C40K□CEJ / FC6A-C40P□CEJ / FC6A-C40R□DEJ
FC6A-C40K□DEJ / FC6A-C40P□DEJ

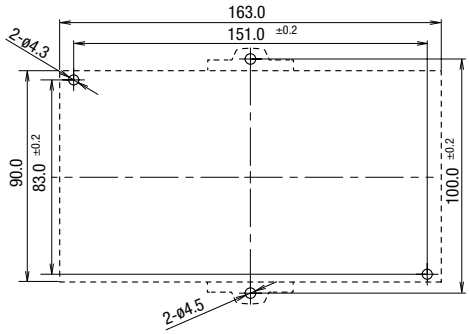

Plus CPU Modules

FC6A-D16R□CEE
FC6A-D16K□CEE
FC6A-D16P□CEE
FC6A-D32K□CEE
FC6A-D32P□CEE

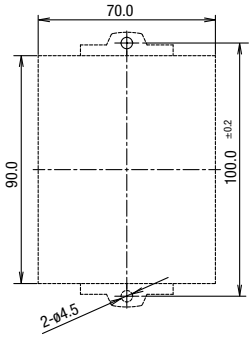

Expansion Modules

FC6A-PH1

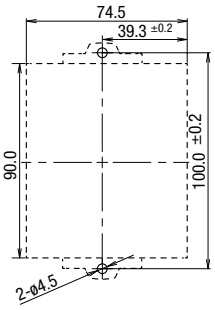

FC6A-EXM1S□

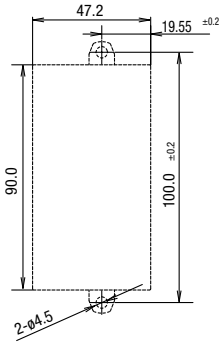

FC6A-HPH1

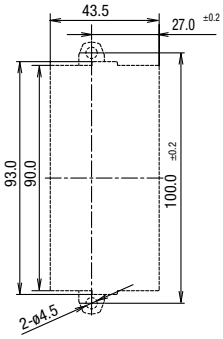

FC6A-N16B3
FC6A-T16K3
FC6A-T16P3

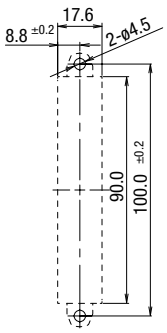

FC6A-N32B3
FC6A-T32K3
FC6A-T32P3

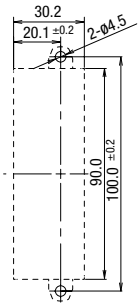

FC6A-F2M□
FC6A-F2MR□
FC6A-EXM2□

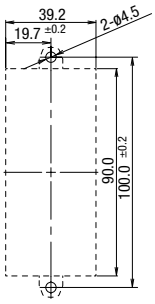

FC6A-SIF52□
FC6A-EXM1M
FC6A-N08B□
FC6A-N08A1□
FC6A-R08□
FC6A-T08K□
FC6A-T08P□
FC6A-M08BR□
FC6A-N16B□
FC6A-R16□
FC6A-T16K□
FC6A-T16P□
FC6A-J2C□
FC6A-K2A□
FC6A-K4A□
FC6A-L03CN□
FC6A-J4A□
FC6A-J8A□
FC6A-J4CN□
FC6A-J4CH□Y
FC6A-J8CU□
FC6A-L06A□

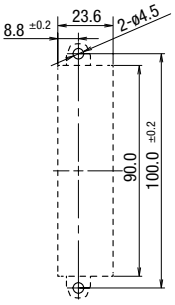

Note: Specify a terminal type code in place of □ in the Part No.
(blank: screw fastened type, 3: MIL connector type, 4: Push-in type)
Note: See page 4 to 7 for part numbers.

All dimensions in mm.

Instructions

Basic Instructions

Symbol	Function	Instruction Length (byte) (*1)	
		When using bit device	When using data register
AND	Series connection of NO contact	8	2
AND·LOD	Series connection of circuit blocks	8	
ANDN	Series connection of NC contact	12	
BPP	Restores the result of bit logical operation which was saved temporarily	4	
BPS	Saves the result of bit logical operation temporarily	4	
BRD	Reads the result of bit logical operation which was saved temporarily	4	
CC=	Equal to comparison of counter current value	12 to 16	
CC≥	Greater than or equal to comparison of counter current value	12 to 16	
CDP	Dual pulse reversible counter (0 to 65,535)	12 to 16	
CDPD	Double-word dual pulse reversible counter (0 to 4,294,967,295)	12 to 16	
CNT	Adding counter (0 to 65,535)	12 to 16	
CNTD	Double-word adding counter (0 to 4,294,967,295)	12 to 16	
CUD	Up/down selection reversible counter (0 to 65,535)	12 to 16	
CUDD	Double-word up/down selection reversible counter (0 to 4,294,967,295)	12 to 16	
DC=	Equal to comparison of data register value	12 to 24	
DC≥	Greater than or equal to comparison of data register value	12 to 24	
END	Ends a program	4	
JEND	Ends a jump instruction	4	
JMP	Jumps a designated program area	12	
LOD	Stores intermediate results and reads contact status	8	12
LODN	Stores intermediate results and reads inverted contact status	12	
MCR	Ends a master control	4	
MCS	Starts a master control	4	
OR	Parallel connection of NO contact	8	12
OR·LOD	Parallel connection of circuit blocks	8	
ORN	Parallel connection of NC contact	12	
OUT	Outputs the result of bit logical operation	8	
OUTN	Output the inverted result of bit logical operation	8	
RST	Reset	8	
SET	Set	8	
SFR	Forward shift register	12	
SFRN	Reverse shift register	12	
SOTD	Falling-edge differentiation output	8	
SOTU	Rising-edge differentiation output	8	
TIM	Subtracting 100-ms timer (0 to 6553.5 sec)	12 to 16	
TIMO	Subtracting 100-ms off-delay timer (0 to 6553.5 sec)	12 to 16	
TMH	Subtracting 10-ms timer (0 to 655.35 sec)	12 to 16	
TMHO	Subtracting 10-ms off-delay timer (0 to 655.35 sec)	12 to 16	
TML	Subtracting 1-sec timer (0 to 65535 sec)	12 to 16	
TMLO	Subtracting 1-sec off-delay timer (0 to 65535 sec)	12 to 16	
TMS	Subtracting 1-ms timer (0 to 65.535 sec)	12 to 16	
TMSO	Subtracting 1-ms off-delay timer (0 to 65.535 sec)	12 to 16	

*1) 1 step = 8 bytes

Instructions

Advanced Instructions

Symbol	Function
NOP	No Operation
MOV	Move
MOVC	Move Character
MOVN	Move Not
IMOV	Indirect Move
IMOVN	Indirect Move Not
BMOV	Block Move
IBMV	Indirect Bit Move
IBMVN	Indirect Bit Move Not
NSET	N Data Set
NRS	N Data Repeat Set
XCHG	Exchange
TCCST	Timer/Counter Current Value Store
CMP=	Compare Equal To
CMP<>	Compare Unequal To
CMP<	Compare Less Than
CMP>	Compare Greater Than
CMP<=	Compare Less Than or Equal To
CMP>=	Compare Greater Than or Equal To
ICMP>=	Interval Compare Greater Than or Equal
LC=	Load Compare Equal To
LC<>	Load Compare Unequal To
LC<	Load Compare Less Than
LC>	Load Compare Greater Than
LC<=	Load Compare Less Than or Equal To
LC<=	Load Compare Greater Than or Equal To
ADD	Addition
SUB	Subtraction
MUL	Multiplication
DIV	Division
INC	Increment
DEC	Decrement
ROOT	Root
SUM	Sum
RNDM	Random
ANDW	AND Word
ORW	OR Word
XORW	Exclusive OR Word
SFTL	Shift Left
SFTR	Shift Right
BCDLS	BCD Left Shift
WSFT	Word Shift
ROTL	Rotate Left
ROTR	Rotate Right
HTOB	Hex to BCD
BTOH	BCD to Hex
HTOA	Hex to ASCII
ATOH	ASCII to Hex
BTOA	BCD to ASCII
ATOB	ASCII to BCD
ENCO	Encode
DECO	Decode
BCNT	Bit Count
ALT	Alternate Output
CVDT	Convert Data Type
DTDV	Data Divide
DTCB	Data Combine
SWAP	Data Swap

Instructions

Advanced Instructions

Symbol	Function
WEEK	Weekly Timer
YEAR	Yearly Timer
WKTIM	Week Timer
WKTBL	Week Table
MSG	Message
DISP	Display
DGRD	Digital Read
TXD	Transmit
ETXD	Transmit over Ethernet
RXD	Receive
ERXD	Transmit over Ethernet
LABEL	Label
LJMP	Label Jump
LCAL	Label Call
LRET	Label Return
DJNZ	Decrement Jump Non-zero
DI	Disable Interrupt
EI	Enable Interrupt
IOREF	I/O Refresh
HSCRF	High-speed Counter Refresh
FRQRF	Frequency Measurement Refresh
COMRF	Communication Refresh
XYFS	XY Format Set
CVXTY	Convert X to Y
CVYTX	Convert Y to X
AVRG	Average
PULS	Pulse Output
PWM	Pulse Width Modulation
RAMP	Ramp Pulse Output
RAMPL	Linear Interpolation with RAMP Pulse Output (*1)
ZRN	Zero Return
ARAMP	Advanced Ramp
ABS	Set the origin
JOG	Pulse with direction
PID	PID Control (FC5A compatible)
PIDA	PID Control
PIDD	PID with Derivative Decay
DTML	1-sec Dual Timer
DTIM	100-ms Dual Timer
DTMH	10-ms Dual Timer
DTMS	1-ms Dual Timer
TTIM	Teaching Timer
RAD	Degree to Radian
DEG	Radian to Degree
SIN	Sine
COS	Cosine
TAN	Tangent
ASIN	Arc Sine
ACOS	Arc Cosine
ATAN	Arc Tangent
LOGE	Natural Logarithm
LOG10	Common Logarithm
EXP	Exponent
POW	Power
FIFOF	FIFO Format
FIEX	First-In Execute
FOEX	First-Out Execute
NDSRC	N Data Search

*1) Cannot be used on All-in-One model.

Instructions

Symbol	Function
TADD	Time Addition
TSUB	Time Subtraction
HTOS	HMS to Sec
STOH	Sec to HMS
HOUR	Hour Meter
SCRPT	Script
UMACRO	User-defined Macro
SCALE	Convert Analog Input
FLWA	Analog Flow Totalizer
FLWP	Pulse Flow Totalizer
PING	Ping
EMAIL	Send Email (*2)
DLOG	Data Logging
TRACE	Data Trace

*2) HMI module is necessary to use on All-in-One model.

Ordering Terms and Conditions

Thank you for using IDEC Products.

By purchasing products listed in our catalogs, datasheets, and the like (hereinafter referred to as "Catalogs") you agree to be bound by these terms and conditions. Please read and agree to the terms and conditions before placing your order.

1. Notes on contents of Catalogs

(1) Rated values, performance values, and specification values of IDEC products listed in this Catalog are values acquired under respective conditions in independent testing, and do not guarantee values gained in combined conditions.
Also, durability varies depending on the usage environment and usage conditions.

(2) Reference data and reference values listed in Catalogs are for reference purposes only, and do not guarantee that the product will always operate appropriately in that range.

(3) The specifications / appearance and accessories of IDEC products listed in Catalogs are subject to change or termination of sales without notice, for improvement or other reasons.

(4) The content of Catalogs is subject to change without notice.

2. Note on applications

(1) If using IDEC products in combination with other products, confirm the applicable laws / regulations and standards.
Also, confirm that IDEC products are compatible with your systems, machines, devices, and the like by using under the actual conditions. IDEC shall bear no liability whatsoever regarding the compatibility with IDEC products.

(2) The usage examples and application examples listed in Catalogs are for reference purposes only. Therefore, when introducing a product, confirm the performance and safety of the instruments, devices, and the like before use. Furthermore, regarding these examples, IDEC does not grant license to use IDEC products to you, and IDEC offers no warranties regarding the ownership of intellectual property rights or non-infringement upon the intellectual property rights of third parties.

(3) When using IDEC products, be cautious when implementing the following.

i. Use of IDEC products with sufficient allowance for rating and performance

ii. Safety design, including redundant design and malfunction prevention design that prevents other danger and damage even in the event that an IDEC product fails

iii. Wiring and installation that ensures the IDEC product used in your system, machine, device, or the like can perform and function according to its specifications

(4) Continuing to use an IDEC product even after the performance has deteriorated can result in abnormal heat, smoke, fires, and the like due to insulation deterioration or the like. Perform periodic maintenance for IDEC products and the systems, machines, devices, and the like in which they are used.

(5) IDEC products are developed and manufactured as general-purpose products for general industrial products. They are not intended for use in the following applications, and in the event that you use an IDEC product for these applications, unless otherwise agreed upon between you and IDEC, IDEC shall provide no guarantees whatsoever regarding IDEC products.

i. Use in applications that require a high degree of safety, including nuclear power control equipment, transportation equipment (railroads / airplanes / ships / vehicles / vehicle instruments, etc.), equipment for use in outer space, elevating equipment, medical instruments, safety devices, or any other equipment, instruments, or the like that could endanger life or human health

ii. Use in applications that require a high degree of reliability, such as provision systems for gas / waterworks / electricity, etc., systems that operate continuously for 24 hours, and settlement systems

iii. Use in applications where the product may be handled or used deviating from the specifications or conditions / environment listed in the Catalogs, such as equipment used outdoors or applications in environments subject to chemical pollution or electromagnetic interference
If you would like to use IDEC products in the above applications, be sure to consult with an IDEC sales representative.

3. Inspections

We ask that you implement inspections for IDEC products you purchase without delay, as well as thoroughly keep in mind management/maintenance regarding handling of the product before and during the inspection.

4. Warranty

(1) Warranty period

The warranty period for IDEC products shall be one (1) year after purchase or delivery to the specified location. However, this shall not apply in cases where there is a different specification in the Catalogs or there is another agreement in place between you and IDEC.

(2) Warranty scope

Should a failure occur in an IDEC product during the above warranty period for reasons attributable to IDEC, then IDEC shall replace or repair that product, free of charge, at the purchase location / delivery location of the product, or an IDEC service base. However, failures caused by the following reasons shall be deemed outside the scope of this warranty.

i. The product was handled or used deviating from the conditions / environment listed in the Catalogs

ii. The failure was caused by reasons other than an IDEC product

iii. Modification or repair was performed by a party other than IDEC

iv. The failure was caused by a software program of a party other than IDEC

v. The product was used outside of its original purpose

vi. Replacement of maintenance parts, installation of accessories, or the like was not performed properly in accordance with the user's manual and Catalogs

vii. The failure could not have been predicted with the scientific and technical standards at the time when the product was shipped from IDEC.

viii. The failure was due to other causes not attributable to IDEC (including cases of force majeure such as natural disasters and other disasters)

Furthermore, the warranty described here refers to a warranty on the IDEC product as a unit, and damages induced by the failure of an IDEC product are excluded from this warranty.

5. Limitation of liability

The warranty listed in this Agreement is the full and complete warranty for IDEC products, and IDEC shall bear no liability whatsoever regarding special damages, indirect damages, incidental damages, or passive damages that occurred due to an IDEC product.

6. Service scope

The prices of IDEC products do not include the cost of services, such as dispatching technicians. Therefore, separate fees are required in the following cases.

(1) Instructions for installation / adjustment and accompaniment at test operation (including creating application software and testing operation, etc.)

(2) Maintenance inspections, adjustments, and repairs

(3) Technical instructions and technical training

(4) Product tests or inspections specified by you

The above content assumes transactions and usage within your region. Please consult with an IDEC sales representative regarding transactions and usage outside of your region. Also, IDEC provides no guarantees whatsoever regarding IDEC products sold outside your region.

IDEC CORPORATION

www.idec.com

Head Office
6-64, Nishi-Miyahara-2-Chome, Yodogawa-ku, Osaka 532-0004, Japan

USA	IDEC Corporation	Tel: +1-408-747-0550	opencontact@idec.com	**Hong Kong**	IDEC Izumi (H.K.) Co., Ltd.	Tel: +852-2803-8989	info@hk.idec.com
Germany	APEM GmbH	Tel: +49-40-25 30 54-0	service@eu.idec.com	**China**	IDEC (Shanghai) Corporation	Tel: +86-21-6135-1515	idec@cn.idec.com
Singapore	IDEC Izumi Asia Pte. Ltd.	Tel: +65-6746-1155	info@sg.idec.com		Beijing Branch	Tel: +86-10-6581-6131	idec@cn.idec.com
Thailand	IDEC Asia (Thailand) Co., Ltd	Tel: +66-2-392-9765	sales@th.idec.com		Guangzhou Branch	Tel: +86-20-8362-2394	idec@cn.idec.com
India	IDEC Controls India Private Limited	Tel: +91-80679-35328	info_india@idec.com	**Japan**	IDEC Corporation	Tel: +81-6-6398-2527	jp_marketing@idec.com
Taiwan	IDEC Taiwan Corporation	Tel: +886-2-2577-6938	service@tw.idec.com				

Specifications and other descriptions in this brochure are subject to change without notice.
Information in this brochure is current as of April, 2021.

EP1624-13