Photoelectric Sensors

BOS 64K-AA-ID10-TG
Order Code: BOS01K2

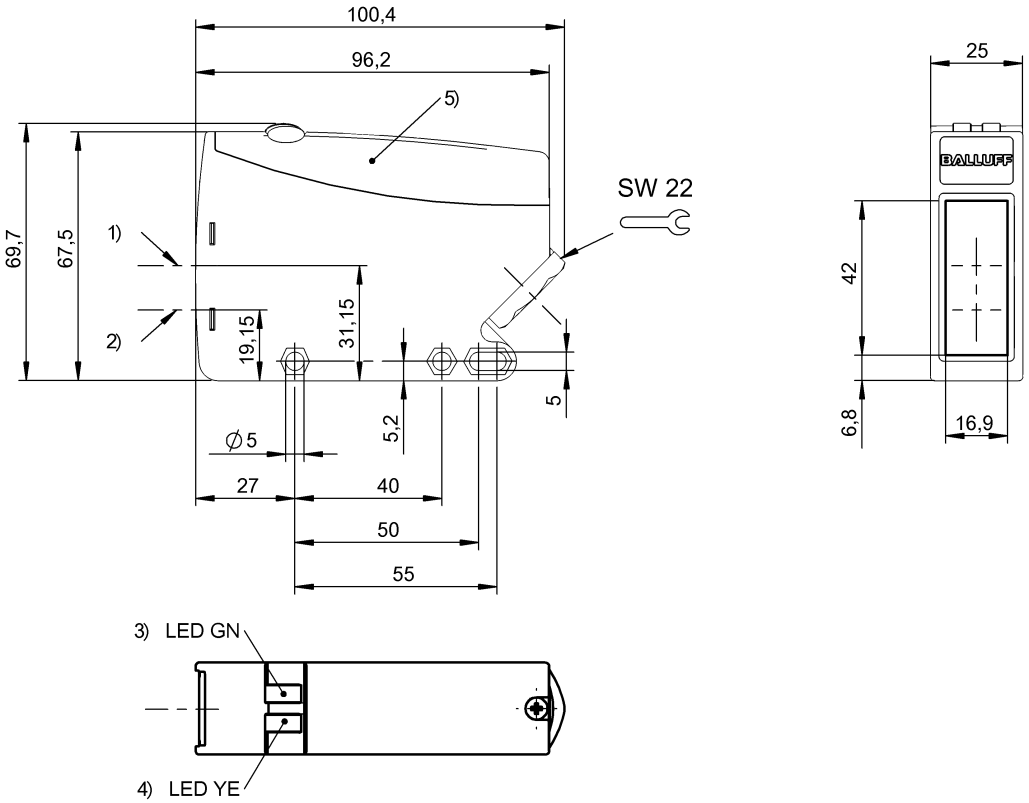

1) Optical axis receiver, 2) Optical axis emitter, 3) Stability, 4) Output function, 5) Removable cover

IND. CONT. EQ
1TD4
for use in the secondary of
a class 2 source of supply

Basic features

Approval/Conformity	CE cULus EAC WEEE
Basic standard	IEC 60947-5-2
Principle of operation	Photoelectric sensor
Series	64K
Style	Square Connection 45°

Display/Operation

Adjuster	Potentiometer 240° (2x) Slide switch (4x)
Display	Output function- LED yellow Stability - LED green
Setting	Time function Light-on/dark-on Rated switching distance (Sn)

Electrical connection

Cable diameter D	8...10 mm
Connection	Screw terminals
Polarity reversal protected	yes
Protection against device mix-ups	yes

Electrical data

No-load current Io max. at Ue	25 mA
Operating voltage Ub	24...60 VDC/24...240 VAC
Protection class	II
Rated insulation voltage Ui	250 V AC
Rated operating current Ie	3000 mA
Rated operating voltage Ue AC	230 V
Rated operating voltage Ue DC	24 V
Ripple max. (% of Ue)	10 %
Switching frequency	20 Hz
Turn-off delay toff max.	25 ms
Turn-on delay ton max.	25 ms
Utilization category	AC-140

BOS 64K-AA-ID10-TG
Order Code: BOS01K2

Environmental conditions

Ambient temperature	-25...55 °C
EN 60068-2-27, Shock	Half-sinus, 30 gn, 11 ms, 3x6
EN 60068-2-6, Vibration	10…55 Hz, amplitude 0.5 mm, 3x30 min
Protection degree	IP67

Functional safety

MTTF (40 °C)	289 a

Material

Housing material	PBT, GF30
Material sensing surface	PC

Mechanical data

Dimension	25 x 69.7 x 100.4 mm
Mounting	Screw M4
Tightening torque max.	1.2 Nm

Optical features

Ambient light max.	5000 Lux
Beam characteristic	Divergent
LED group per IEC 62471	Exempt Group
Light type	Infrared
Principle of optical operation	Diffuse sensor, energetic
Switching function, optical	Light-on dark-on
Wave length	940 nm

Output/Interface

Duration of time function	T = 0.6…16 s
Switching output	Relay NO/NC change-over contact
Time function	switch-off delay On/off delay Turn-on delay Single pulse

Range/Distance

Range	50...2000 mm
Rated operating distance Sn	2 m Adjustable

Remarks

Reference object (target): gray card, 200 x 200, 90 % remission, axial approach.
For additional information, refer to user's guide.
Order accessories separately.
For more information about MTTF and B10d see MTTF / B10d Certificate

Indication of the MTTF- / B10d value does not represent a binding composition and/or life expectancy assurance; these are simply experiential values with no warranty implications. These declared values also do not extend the expiration period for defect claims or affect it in any way.

Wiring Diagrams

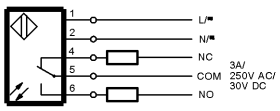

Help Views

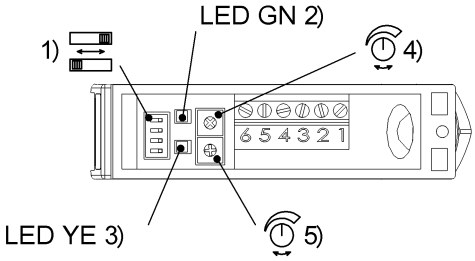

1)Light-on/dark-on, time funct
2) Stability
3) Output function
4) Sensitivity
5) Delay time

Opto Symbols