Pacific Automation
Reliable Solutions From The World's Latest Technology

ZWS SERIES

AC/DC Single Output: 5 - 150 Watts

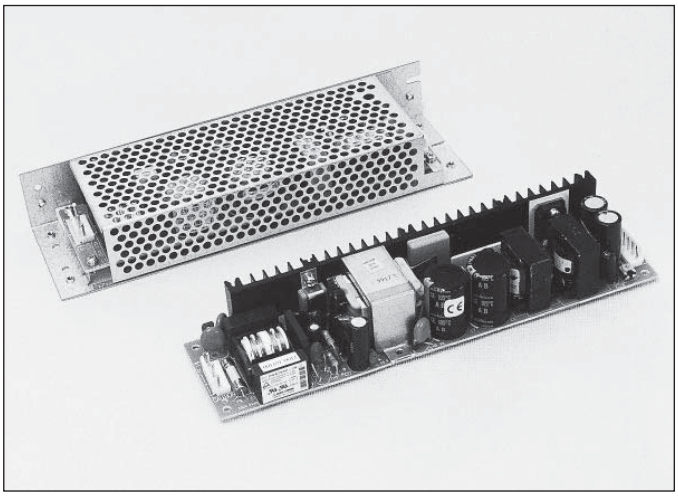

Features

- Universal input 85 - 265VAC
- Wide range of models from 5-150 watts
- Output voltage adjustment
- Short circuit and OVP protection
- Harmonic correction EN61000-3-2 (AF models)
- EMC EN55022
- Immunity to EN61000-4 (AF models)
- International safety approvals EN60950
- Some modes suitable for **Battery Charging**
- Convection cooled
- Full power to 50°C
- Open frame or vented case options

Dimensions:

	L	W	H	Weight:
Open Frame				
ZWS5	98	45	21mm	65g
ZWS10	105	50	21mm	75g
ZWS15	125	50	21mm	95g
ZWS30	133	55	26mm	200g
ZWS50	195	55	26mm	250g
ZWS75	222	55	35mm	320g
ZWS100	222	62	35mm	360g
ZWS150	222	75	40mm	510g
Vented Case				
ZWS5-A	118	52	32mm	180g
ZWS10-A	125	57	32mm	200g
ZWS15-A	145	57	32mm	300g
ZWS30-A	163	65	36mm	370g
ZWS50-A	225	65	36mm	500g
ZWS75-A	252	65	43mm	900g
ZWS100-A	253	72	45mm	900g
ZWS150-A	252	85	51mm	1400g

Cable Harness Part No's:

H-IN-5L:	Input 5 - 150W models
H-OU-8L:	Output 5 - 15W models
H-OU-9L:	Output 30 - 50W models
H-OU-18L:	Output 75W models
H-OU-10L:	Output 100W models
H-OU-11L:	Output 150W models
H-OU-12L:	Output 150W models

Specifications

INPUT VOLTAGE:	85 - 264 VAC, 120 - 370 VDC
INPUT FREQUENCY:	47 - 63Hz
EFFICIENCY:	Model dependent 67-82%
INPUT CURRENT: (@230V)	ZWS5: 0.07A, ZWS10: 0.15A, ZWS15: 0.23A, ZWS30: 0.42A, ZWS50: 0.4A, ZWS75: 0.6A, ZWS100: 0.7A, ZWS150: 1.0A
INRUSH CURRENT:	14A @ 100VAC, 28A @ 230VAC cold start
HARMONICS:	EN61000-3-2 (ZWS75AF-150 models)
POWER FACTOR:	0.95 - 0.99 (ZWS75AF - 150AF models)
OUTPUT POWER:	5-150 Watts
OUTPUT V RANGE:	Typically ±10%
OUTPUT PEAK POWER:	For 12-48V models, typically 120%, 10 sec.
RIPPLE & NOISE:	Model dependent 150-400mV (3.3-48V)
LINE REGULATION:	Typically 0.5%
LOAD REGULATION:	Model dependent: 0.8-1.0%
TEMP. CO-EFFICIENT:	0.03% per °C
OVERCURRENT PROTECT:	ZWS5-30: Fold back current limit. ZWS50-150: OVP Constant current limit with auto recovery set at approx. 120% of output.
OVERVOLTAGE PROTECT:	ZWS5-ZWS30: Calming by Zener Diode. ZWS50-150: OVP will shut down output. Recycle input after approx 2 minutes to restart
HOLD UP TIME:	Typically 20ms
LEAKAGE CURRENT:	Typically 0.5mA @ 100VAC, 0.16A @ 230VAC
REMOTE ON/OFF:	Available on some models - consult office
PARALLEL OPERATION:	No
OPERATING TEMP:	-10°C to +50°C @ 100% load, 60°C @ 70%
HUMIDITY:	30-90% RH (No dewdrop)
COOLING:	Convection cooled
ISOLATION:	Input - output: 3K VAC Input - ground: 2K VAC Output - ground: 500VAC
VIBRATION:	10-55Hz (sweep for 1 min). 19.6m/s² constant X, Y, Z 1 hour each
SHOCK:	Less than 19.6m/s²
SAFETY:	UL1950 CSA950, EN60950 approvals
EMI:	EN55011 & EN55022-A FCC Class A
IMMUNITY:	ZWS75AF-ZWS150AF models EN61000-4-2, -3, -4, -5, 6, -8, -11
CONNECTOR:	JST plug type

ZWS SERIES

AC/DC Single Output: 5 - 150 Watts

MODEL	Output V	Output A	Power W
ZWS5 - 3 - JA	3.3V	1.0A	3W
ZWS5 - 5 - JA	5V	1.0A	5W
ZWS5 - 12 - JA	12V	0.42A	5W
ZWS5 - 15 - JA	15V	0.34A	5W
ZWS5 - 24 - JA	24V	0.22A	5W
ZWS10 - 3 - JA	3.3V	2.0A	6.6W
ZWS10 - 5 - JA	5V	2.0A	10W
ZWS10 - 12 - JA	12V	0.85A	10W
ZWS10 - 15 - JA	15V	0.7A	10W
ZWS10 - 24 - JA	24V	0.45A	10W
ZWS15 - 3 - JA	3.3V	3.0A	10W
ZWS15 - 5 - JA	5V	3.0A	15W
ZWS15 - 12 - JA	12V	1.25A	15W
ZWS15 - 15 - JA	15V	1.0A	15W
ZWS15 - 24 - JA	24V	0.65A	15W
ZWS30 - 3 - JA	3.3V	6.0A	20W
ZWS30 - 5 - JA	5V	6.0A	30W
ZWS30 - 12 - JA	12V	2.5A	30W
ZWS30 - 15 - JA	15V	2.0A	30W
ZWS30 - 24 - JA	24V	1.3A	30W
ZWS30 - 36 - JA	36V	0.9A	30W
ZWS30 - 48 - JA	48V	0.7A	30W
ZWS50 - 3 - JA	3.3V	10.0A	33W
ZWS50 - 5 - JA	5V	10.0A	50W
ZWS50 - 12 - JA	12V	4.3A	50W
ZWS50 - 15 - JA	15V	3.5A	50W
ZWS50 - 24 - JA	24V	2.1A	50W
ZWS50 - 36 - JA	36V	1.4A	50W
ZWS50 - 48 - JA	48V	1.1A	50W

- J = JST type connector
- A = vented case
- Peak A output set at approx. 120% for 30 sec. maximum

MODEL	Output V	Output A	Power W
ZWS75AF - 3 - JA	3.3V	15A	50W
ZWS75AF - 5 - JA	5V	15A	75W
ZWS75AF - 12 - JA	12V	6.3A	75W
ZWS75AF - 15 - JA	15V	5A	75W
ZWS75AF - 24 - JA	24V	3.2A	75W
ZWS75AF - 36 - JA	36V	2.1A	75W
ZWS75AF - 48 - JA	48V	1.6A	75W
ZWS100AF - 3 - JA	3.3V	20A	66W
ZWS100AF - 5 - JA	5V	20A	100W
ZWS100AF - 12 - JA	12V	8.5A	100W
ZWS100AF - 15 - JA	15V	6.7A	100W
ZWS100AF - 24 - JA	24V	4.3A	100W
ZWS100AF - 36 - JA	36V	2.8A	100W
ZWS100AF - 48 - JA	48V	2.1	100W
ZWS150AF - 3 - JA	3.3V	30A	99W
ZWS150AF - 5 - JA	5V	30A	150W
ZWS150AF - 12 - JA	12V	12.5A	150W
ZWS150AF - 15 - JA	15V	10A	150W
ZWS150AF - 24 - JA	24V	6.3A	150W
ZWS150AF - 36 - JA	36V	4.2A	150W
ZWS150AF - 48 - JA	48V	3.2A	150W
ZWSPF: Battery Charging Models			
ZWS75PF - 15 - JCA	15V	5.0A	75W
ZWS100PF - 15 - JCA	15V	6.7A	100W
ZWS150PF - 15 - JCA	15V	10.0A	150W
ZWS75PF - 28 - JCA	28V	2.7A	75W
ZWS100PF - 28 - JCA	28V	3.6A	100W
ZWS150PF - 28 - JCA	28V	5.4A	150W

Alternative case - see BDA Series

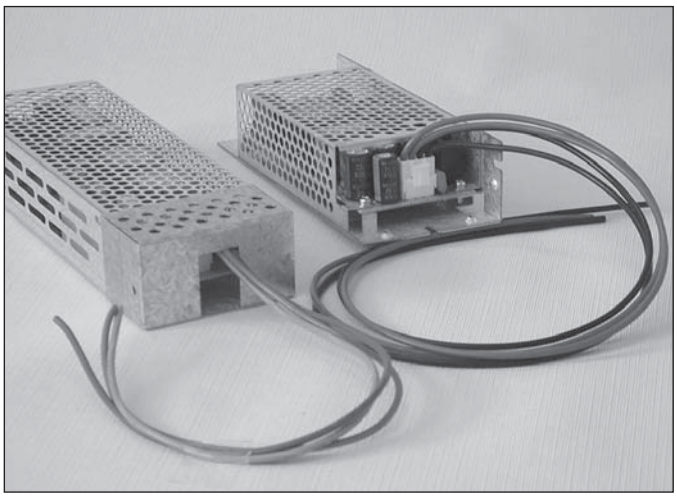

1. Optional AC terminal cover kit (50 - 150W)
2. Optional cable harness

ZWS SERIES

AC/DC Single Output: 5 - 150 Watts

ZWS5 (J Type: JST connector)

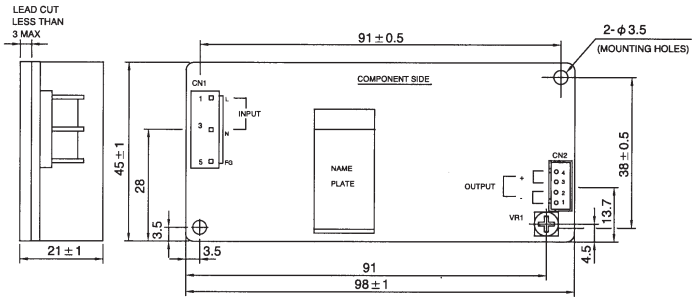

ZWS5 (JA Type: With cover type)

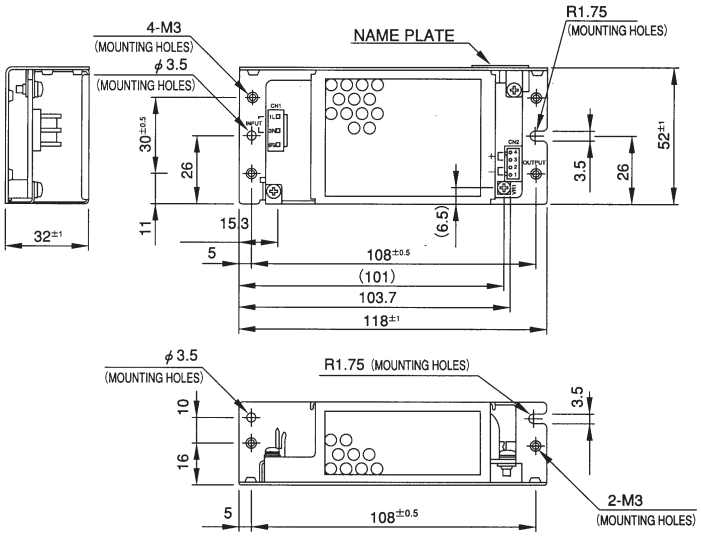

ZWS10 (J Type: JST connector)

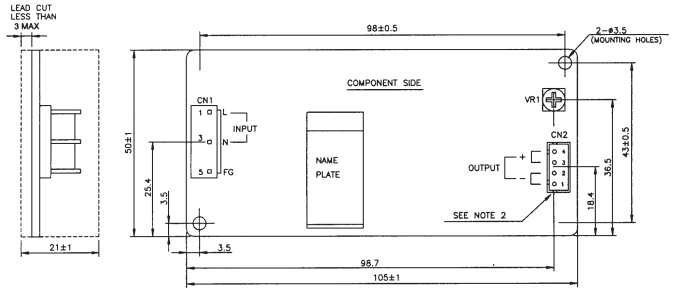

ZWS10 (JA Type: With cover type)

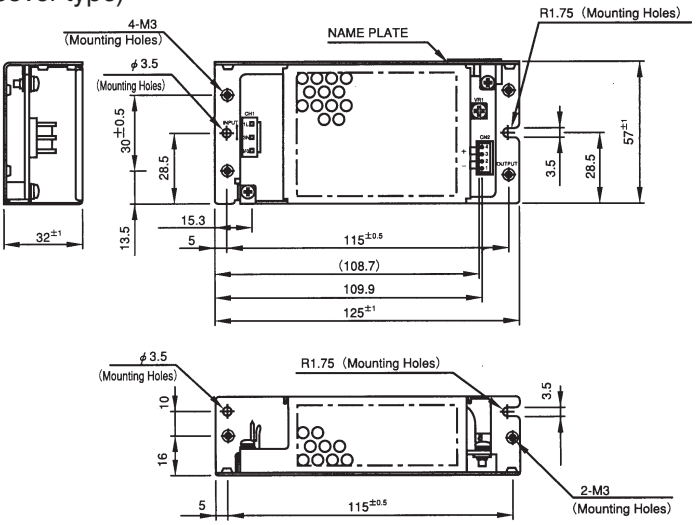

Units mm

ZWS SERIES

AC/DC Single Output: 5 - 150 Watts

ZWS15 (J Type: JST connector)

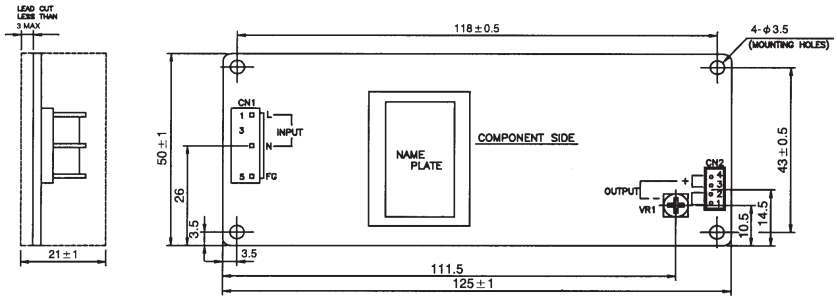

ZWS15 (JA Type: With cover type)

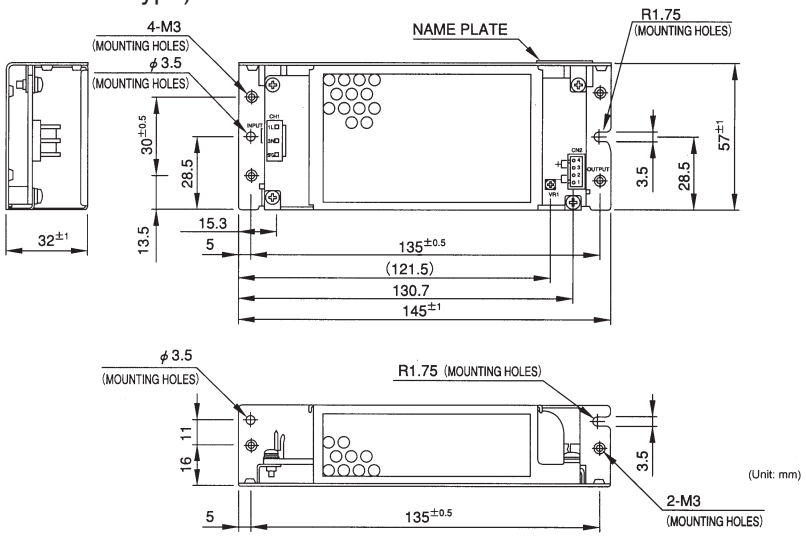

ZWS30 (J Type: JST connector)

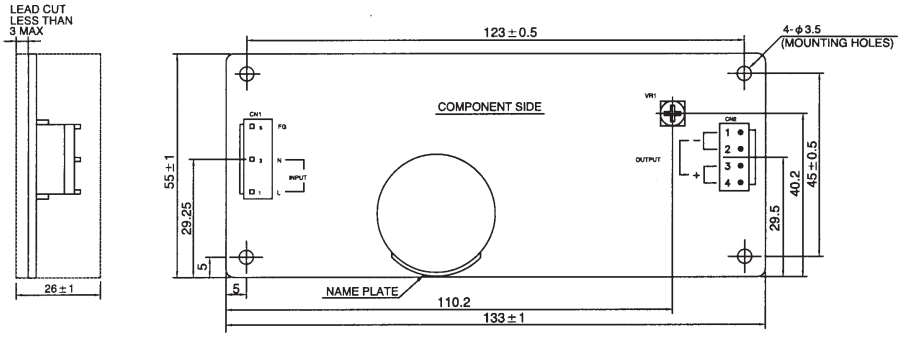

ZWS30 (JA Type: With cover type)

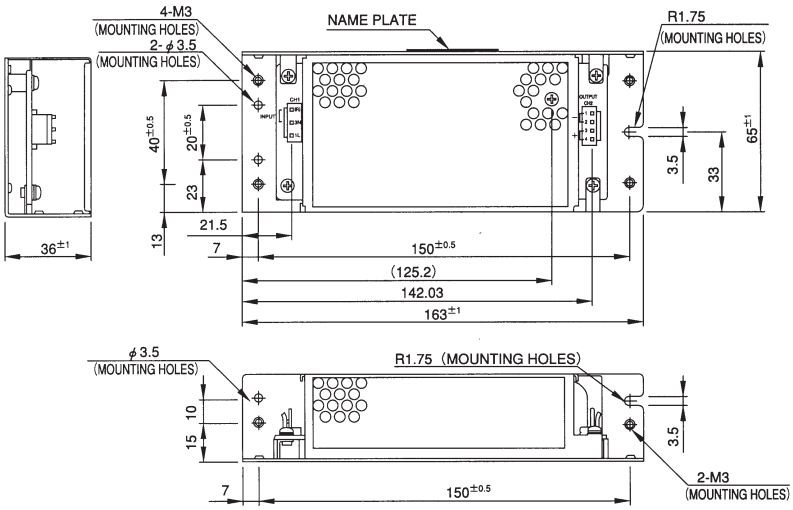

Units mm

ZWS SERIES

AC/DC Single Output: 5 - 150 Watts

ZWS50 (J Type: JST connector)

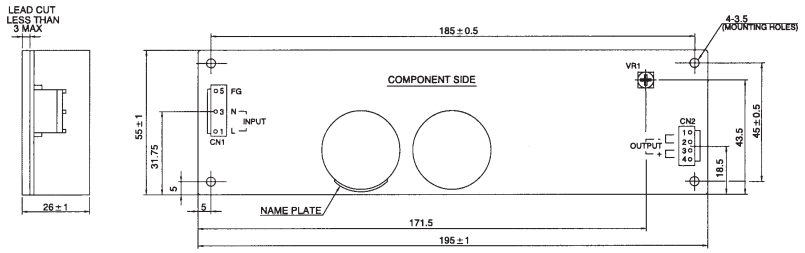

ZWS50 (JA Type: with cover type)

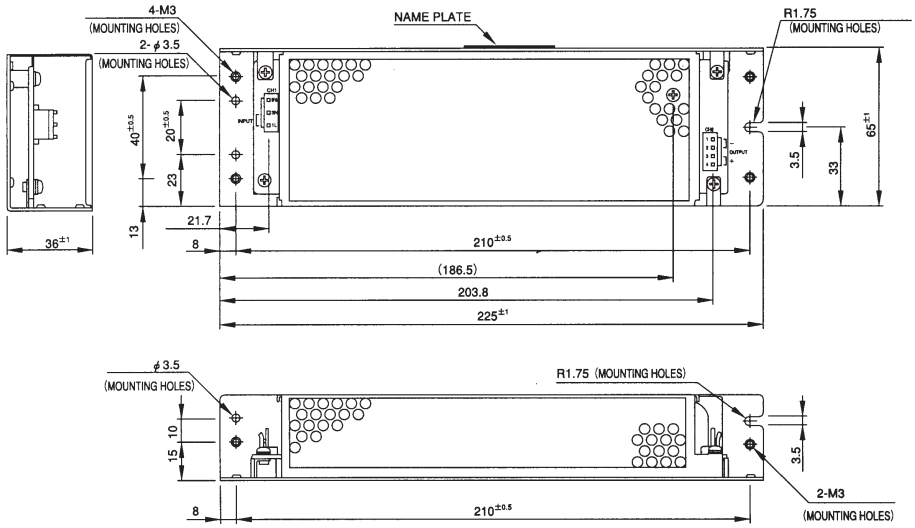

ZWS75 (J Type: JST connector)

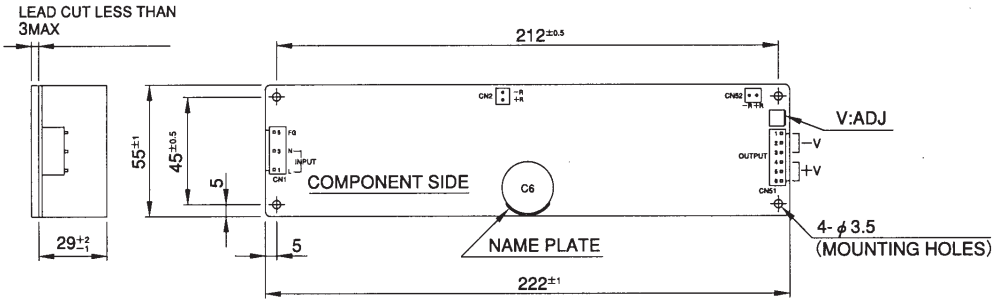

ZWS75 (JA Type: with cover type)

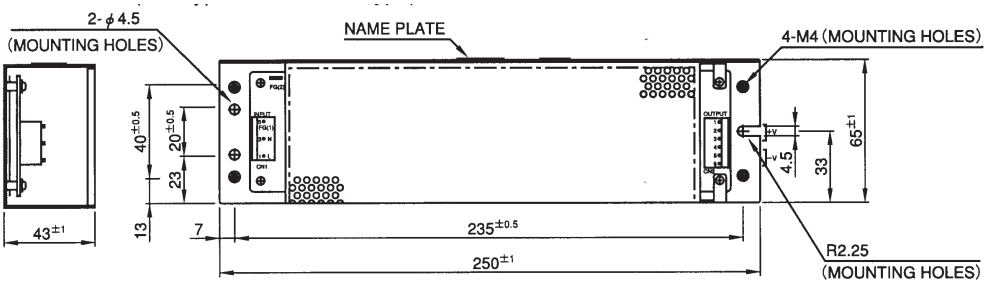

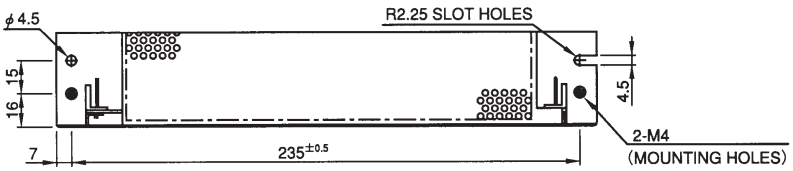

Units mm

60

ZWS SERIES

AC/DC Single Output: 5 - 150 Watts

ZWS100 (J type: JST connector)

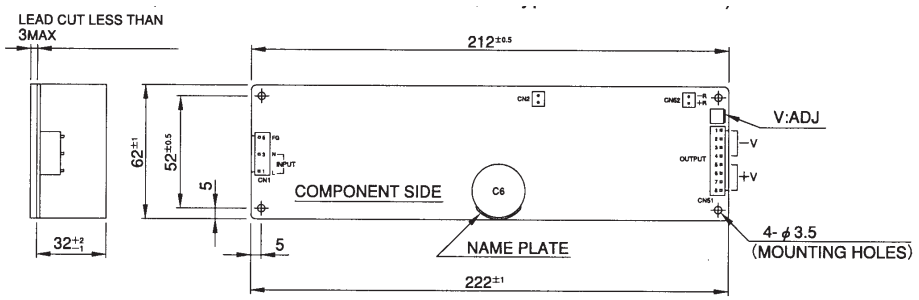

ZWS100 (JA type: with cover type)

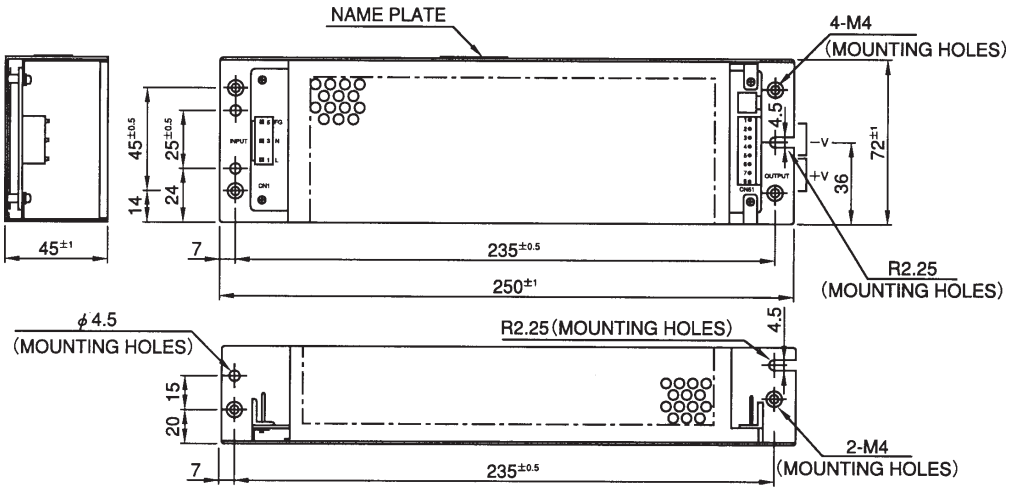

ZWS150 (J Type: JST connector)

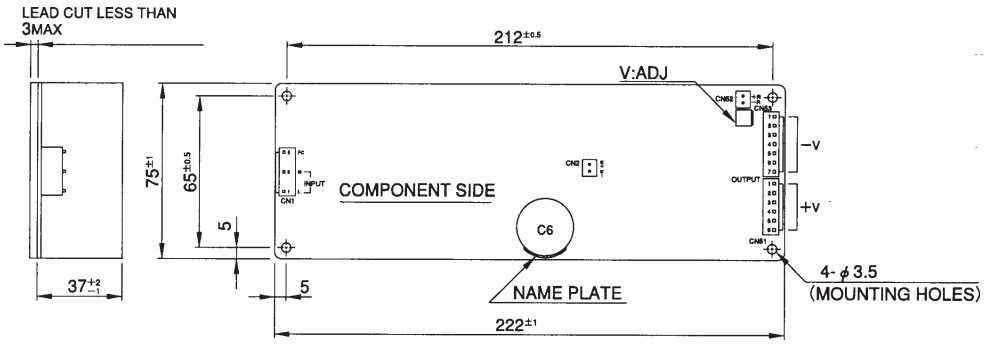

ZWS150 (JA Type: with cover type)

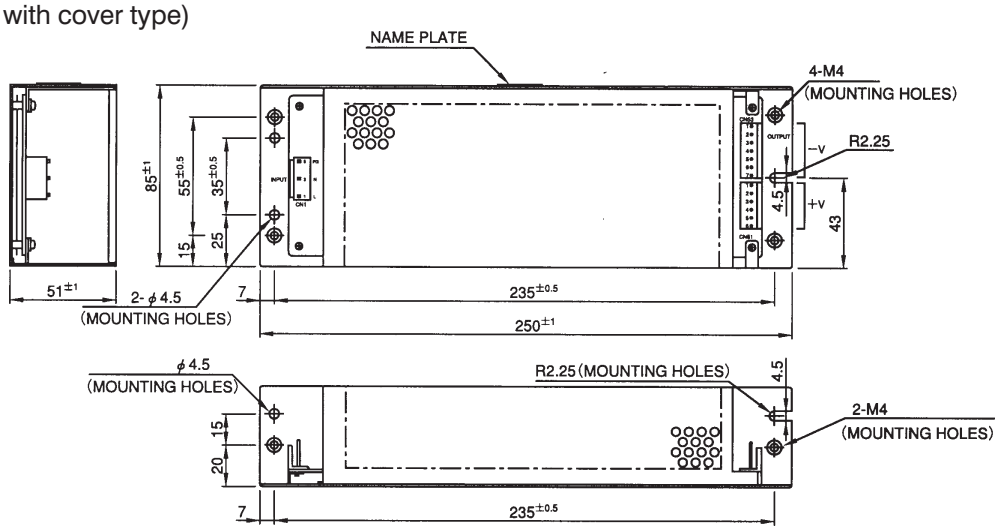

Units mm