WERMA
SIGNALTECHNIK

# Traffic Lights

***Signal beacon for traffic light combinations***

***High light intensity thanks to coloured LED lamp***

***High protection rating IP 65 for indoor and outdoor use***

***Long life LED lamps***

***Practical fixing bow for one, two or three signal beacons***

***Used on loading bays, mine haul roads, vehicle wash bays, car parks, weigh bridges, security barriers etc.***


Pacific Automation
*Reliable Solutions From The World's Latest Technology*

45 Solomon Rd Jandakot
Western Australia 6164
**ABN 46 008 724 098**

P: +61 8 94147999
F: +61 8 94747311
E: sales@pacificautomation.com.au
W: www.pacificautomation.com.au

WERMA SIGNALTECHNIK

## Technical Data

| | |
|---|---|
| Interface: | Screw Connection max. 1.5 mm² single wire |
| Color: | Red, Green, Yellow |
| Cable Entry: | Cable gland M20 x 1,5; cable diameter 6 - 12 mm |
| Life Duration: | 50,000 hr |
| Dimension in mm: | ø 150 x 147 |
| Weight: | 430g |
| Protection Rating: | IP65 |
| Voltage: | 230V AC |
| Voltage type: | AC |
| Current: | Max. 35 mA |
| Temp Range: | -20℃...+50℃ |
| Housing: | ABS |
| Type of signal: | LED Permanent |

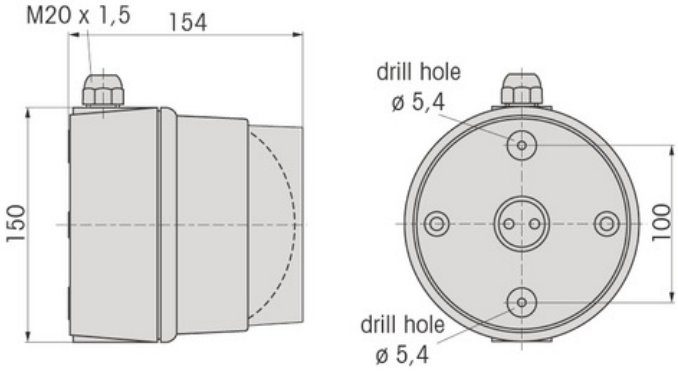


## Ordering Information

**W R Y G TL 240V PE**

W=WERMA

*COLOUR COMBINATION*
R=RED, Y=YELLOW, G=GREEN

TL=TRAFFIC LIGHT

*VOLTAGE*
240VAC, 115VAC, 24VDC

*MOUNTING TYPE*
PE= POLY ENCLOSURE, SE=STAINLESS ENCLOSURE
2B= DOUBLE FIXING BOW, 3B TRIPLE FIXING BOW

Pacific Automation
Reliable Solutions From The World's Latest Technology

45 Solomon Rd, Jandakot
Western Australia 6164
ABN 46 008 724 098

P: +61 8 94147999
F: +61 8 94147311
E: sales@pacificautomation.com.au
W: www.pacificautomation.com.au