RWY RAIL SERIES

DC/DC Single Output: 30 - 280 Watts

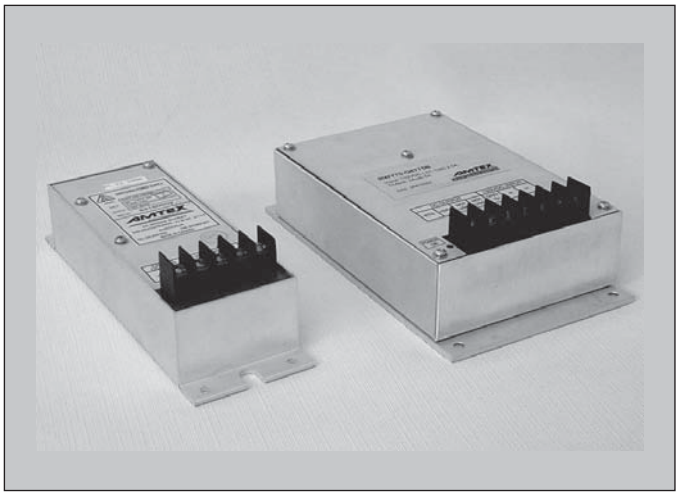

Features

- Wide range of input/output voltage combinations
- Meets Rail Standards EN50155 & EN50121
- Designed for extremely harsh environments
- Fully potted with thermally conductive MIL-spec silicon rubber compound
- Fully isolated to 3000VDC
- Immunity and EMI to EN50121
- Ruggedized for on-board train applications
- MTBF >300,000 hours
- Customised to your specifications

Model	Output V	Output A	Power W
RWY30 - 12	12V	2.5A	30W
RWY30 - 24	24V	1.25A	30W
RWY60 - 12	12V	5.0A	60W
RWY60 - 24	24V	2.5A	60W
RWY100 - 12	12V	8.3A	100W
RWY100 - 24	24V	4.1A	100W
RWY150 - 12	12V	12.5A	150W
RWY150 - 24	24V	6A	150W
RWY200 - 5	5V	30A	150W
RWY200 - 12	12V	16A	200W
RWY200 - 24	24V	8A	200W
RWY280 - 12	12V	23A	280W
RWY280 - 24	24V	11A	280W
RWY72 - Dual	2 x 12V	2 x 6A	150W
RWY72 - Dual	2 x 24V	2 x 3A	150W
RWY182 - Dual	2 x 5 - 72V	2 x 8A	200W
RWY272 - Dual	2 x 12V	2 x 8A	200W
RWY272 - Dual	2 x 24V	2 x 4A	200W
RWY250 - Dual	2 x 5 - 72V	2 x 8A	250W
RWY282 - Dual	2 x 5 - 72V	2 x 12A	280W

- Final part number will be factory allocated.

Specifications

INPUT VOLTAGE:
24 VDC (17~30) 15~37V Transient
72 VDC (50~90) 42~110V Transient
110 VDC (77~137) 57~168V Transient
- Other voltages on request

INPUT PROTECTION:
Reverse polarity protection
Inrush current limiting
Low input voltage will not damage unit

ISOLATION:
Input - output: 3000 VDC
Input - chassis: 1500 VDC
Output - chassis: 1500 VDC

EFFICIENCY:
Model dependent, typically 85%

OUTPUT VOLTAGE:
12V and 24V are standard, consult office for other voltages. Dual output models have two isolated outputs.

OUTPUT POWER:
30~280 watts, refer to table

VOLTAGE ADJUSTMENT:
Fixed

PARALLEL OPERATION:
Only by use of external diode

LINE REGULATION:
±1.5% max. over input range

LOAD REGULATION:
±2% max from no load to full load

OUTPUT PROTECTION:
- Overvoltage protection
- Overload protection
- Thermal protection

SHORT CIRCUIT PROTECT:
Rectangular current limiting with hiccup type mode

EMI:
EN50121 -3 -2

IMMUNITY/EMC:
EN50121 -3 -2
EN61000 -4 -2 Criterion A ESD
EN61000 -4 -3 Criterion A RF immunity
EN61000 -4 -4 Criterion A Transients
EN61000 -4 -6 Criterion A Conducted imm.
EN50155 Voltage variations

OUTPUT RIPPLE & NOISE:
1% pk - pk max of output voltage setting

OPERATING TEMP:
-40°C to +50°C at full load up to +70°C with adequate conduction cooling via baseplate

HUMIDITY:
0-100% condensing

COOLING:
Conduction cooled or convection cooled

INDICATION:
Output LED

OUTPUT ALARM:
NO

TERMINALS:
Screw type terminal block
(other options on request)

DIMENSIONS & WEIGHT:
(Includes flanges)

RWY30-150:	181 x 59 x 56mm	650g
RWY200:	210 x 65 x 58mm	900g
RWY280:	201 x 111 x 61mm	1.3kg
RWY72:	180 x 105 x 58mm	1.3kg
RWY182:	201 x 111 x 61mm	1.3kg
RWY272:	180 x 105 x 58mm	1.3kg
RWY250:	201 x 111 x 61mm	1.5kg
RWY282:	201 x 111 x 61mm	1.5kg

RWY RAIL SERIES

DC/DC Single Output: 30 - 280 Watts

RWY30~150

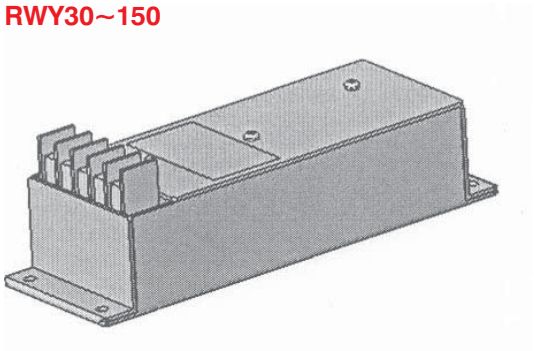

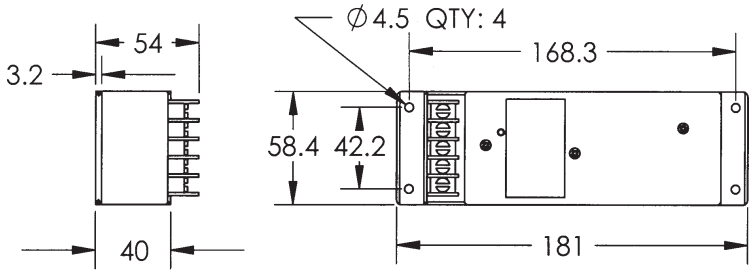

RWY200

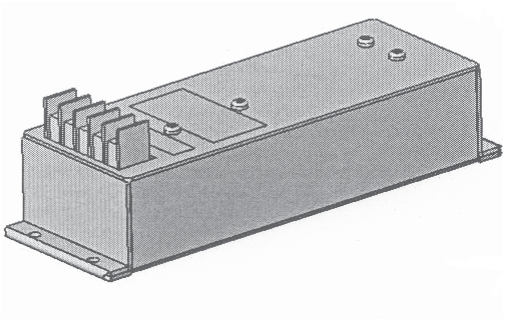

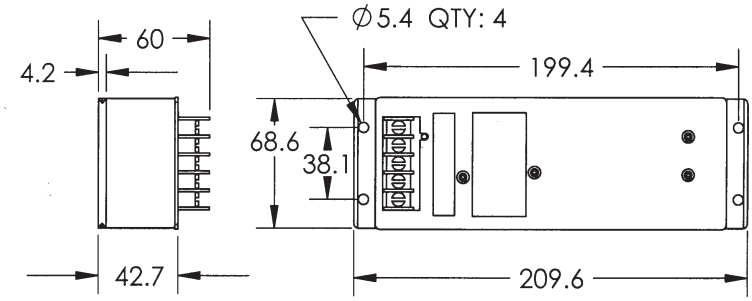

RWY72

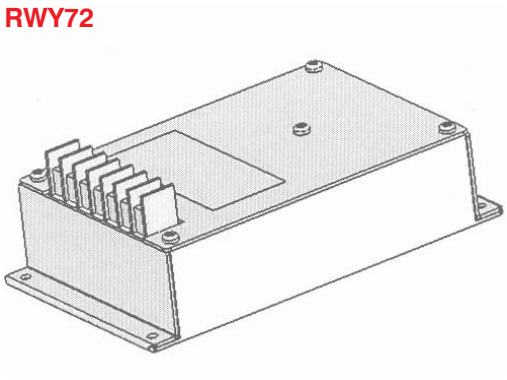

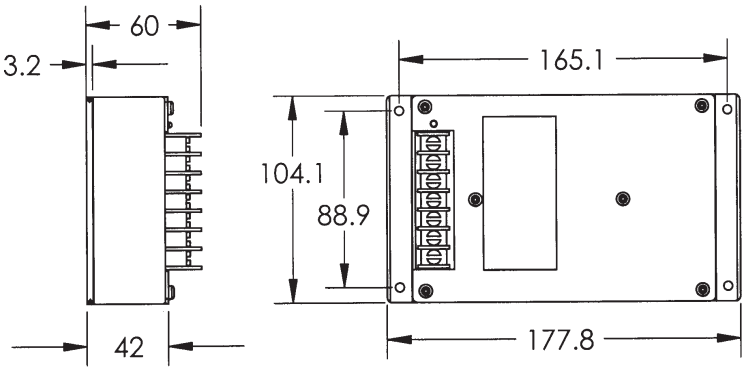
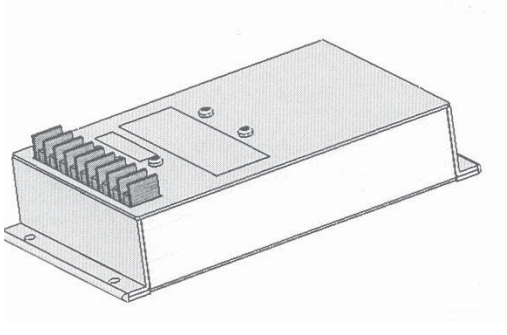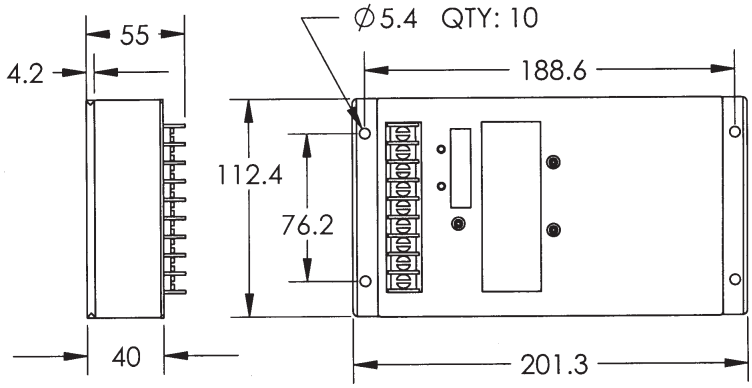
RWY282, 182, 202, 280, 272