DCW SERIES

DC/DC Single Output: 100-200 Watts

Features

- Wide input, 20~60 VDC, 65~160 VDC
- Customised input voltages on request
- Filtered to meet EN55022 Class A EMI
- Fully isolated input - output 1500 VDC
- Open frame or vented case option
- Double regulator overvoltage protection
- Overload protection
- MTBF 150,000 hours
- Inrush current limiting
- Special output voltages up 120V on request
- 150W available as a Eurocard:
  3U x 10HP x 160mm

Model	Input	Output V	Output A	Power W
DCW100 - 5 FT	20-60V	5V	15A	75W
DCW100 - 12 FT	20-60V	12V	8A	96W
DCW100 - 24 FT	20-60V	24V	4A	96W
DCW100 - 48 FT	20-60V	48V	2A	96W
DCW150 - 12 FT	20-60V	12V	12A	144W
DCW150 - 24 FT	20-60V	24V	6A	144W
DCW150 - 48 FT	20-60V	48V	3A	144W
DCW100 - 110 - 5 FT	110V	5V	15A	75W
DCW100 - 110 - 12 FT	110V	12V	8A	96W
DCW100 - 110 - 24 FT	110V	24V	4A	96W
DCW100 - 110 - 48 FT	110V	48V	2A	96W
DCW150 - 110 - 12 FT	110V	12V	12A	144W
DCW150 - 110 - 24FT	110V	24V	6A	144W
DCW150 - 110 - 48FT	110V	48V	3A	144W
DCW200 - 12FT	20 - 60V	12V	16A	192W
DCW200 - 24FT	20 - 60V	24V	8A	192W
DCW200 - 48FT	20 - 60V	48V	4A	192W
DCW200 - 110 - 12FT	110V	12V	16A	192W
DCW200 - 110 - 24FT	110V	24V	8A	192W
DCW200 - 110 - 48FT	100V	48V	4A	192W

- **Other output voltages on request up to 120VDC**

Specifications

INPUT VOLTAGE:	20~60 VDC, 110 VDC (65~160)
INPUT PROTECTION:	Thermal fuse, inrush current limiting
INPUT ISOLATION:	Input - Chassis 1500 VDC Input - Output 1500 VDC Output - Chassis 500 VDC
EFFICIENCY:	Model dependent typically 80~85%
OUTPUT POWER:	100~200 watts
OUTPUT VOLTAGE:	5V, 12V, 24V and 48V are standard, other voltages on request
VOLTAGE ADJUSTMENT:	±5%
LINE & LOAD REGULATION:	±1% combined from no load to full load
OVERVOLTAGE PROTECTION:	Double regulator loop & tranzorb clamp
OVERLOAD PROTECTION:	Current limiting with short circuit protection - hiccup mode
RFI:	Designed to EN55022 Class A conducted
OUTPUT RIPPLE & NOISE:	Better than 1% output voltage pk-pk (20MHz BW)
OPERATING TEMP:	0°C to 50°C. Consult office for higher operating temperature options.
TEMPERATURE DRIFT:	0.03% per °C over operating range
MTBF:	150,000 hours
DIMENSIONS:	100W: 87 x 155 x 50mm 150W: 198 x 112 x 51mm 200W: 254 x 113 x 58mm
WEIGHT:	100W: 560g 150W: 900g 200W: 1.13kg
TERMINAL:	Screw terminal block

DCW100 - 24 - OM

- Output Connector:
  M = mascon pins,
  T = terminal block
- Package: **O** - open PCB,
  P = PCB with base plate,
  F = enclosed case
- Output Voltage:
  5V, 12V, 24V, 48V
  (other options up to 120V)

DCW SERIES

DC/DC Single Output: 100-200 Watts

DCW100

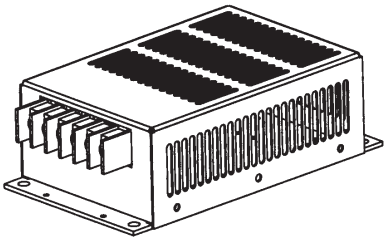

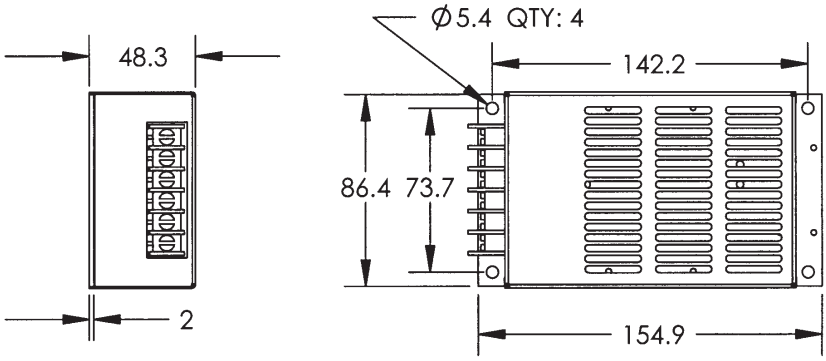

OUTPUT			INPUT		
-	+	N/C	GND	-	+

DCW150

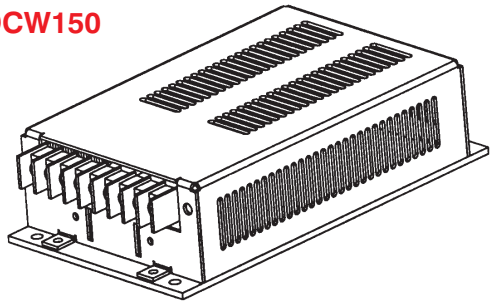

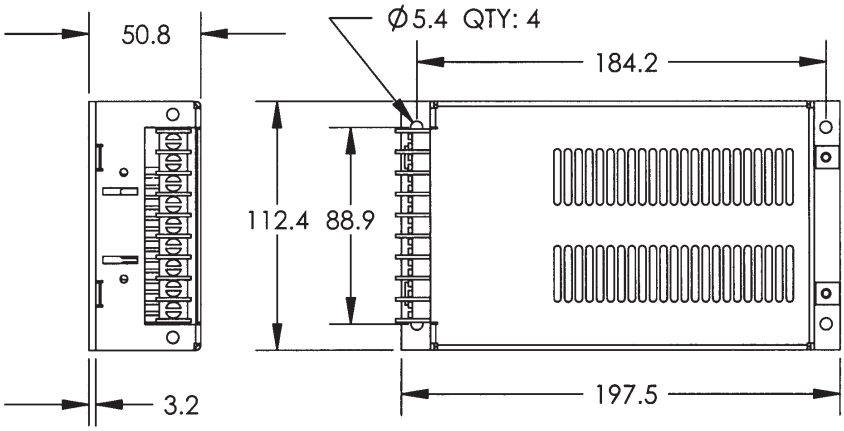

OUTPUT						INPUT		
N/C	N/C	-	-	+	+	GND	-	+

DCW200

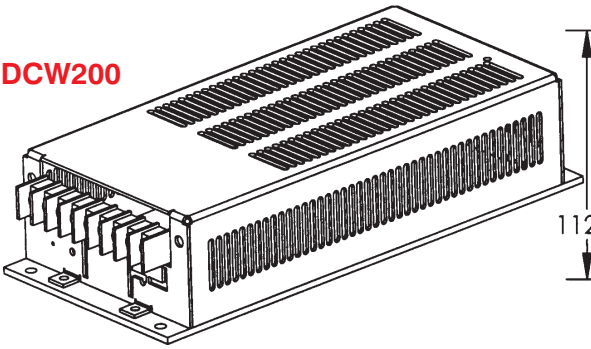

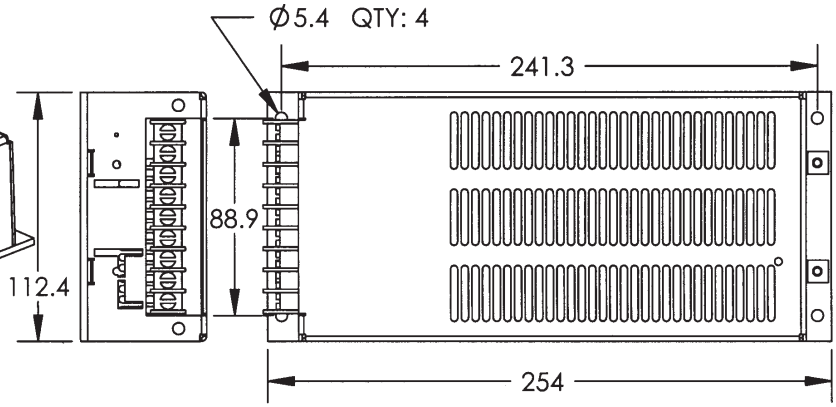

OUTPUT						INPUT		
N/C	N/C	N/C	-	+	N/C	GND	-	+

Input and Output connections via Curtis 38000 Series single row barrier type terminal block with #6 unc screws.